WS36T Watchman™ 36" Rider Auto Scrubber

Parts Schematic

Item #86010

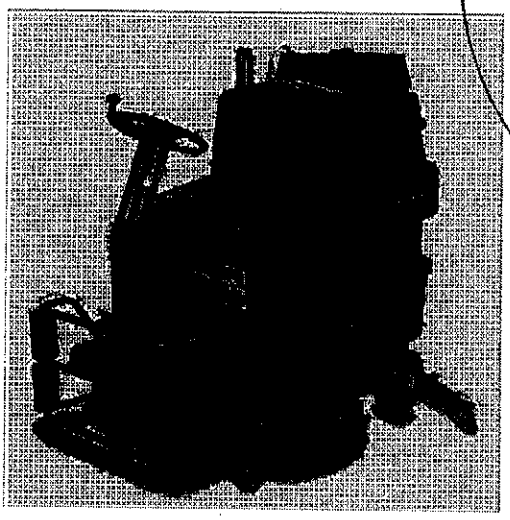

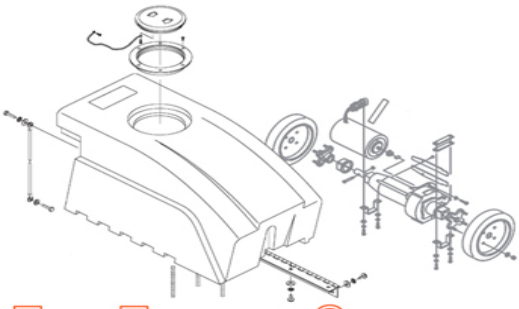

FLOOREQUIPMENTPARTS.COM

Better Resources. Better Results.

BETCO®

©Betco Corporation. All Rights Reserved • 1001 Brown Avenue • P.O. Box 3127 • Toledo, Ohio 43607-0127 • 888-GO BETCO • www.betco.com

CODE: PF03046BC-2 aa SN from 00E200

DESCRIPTION:

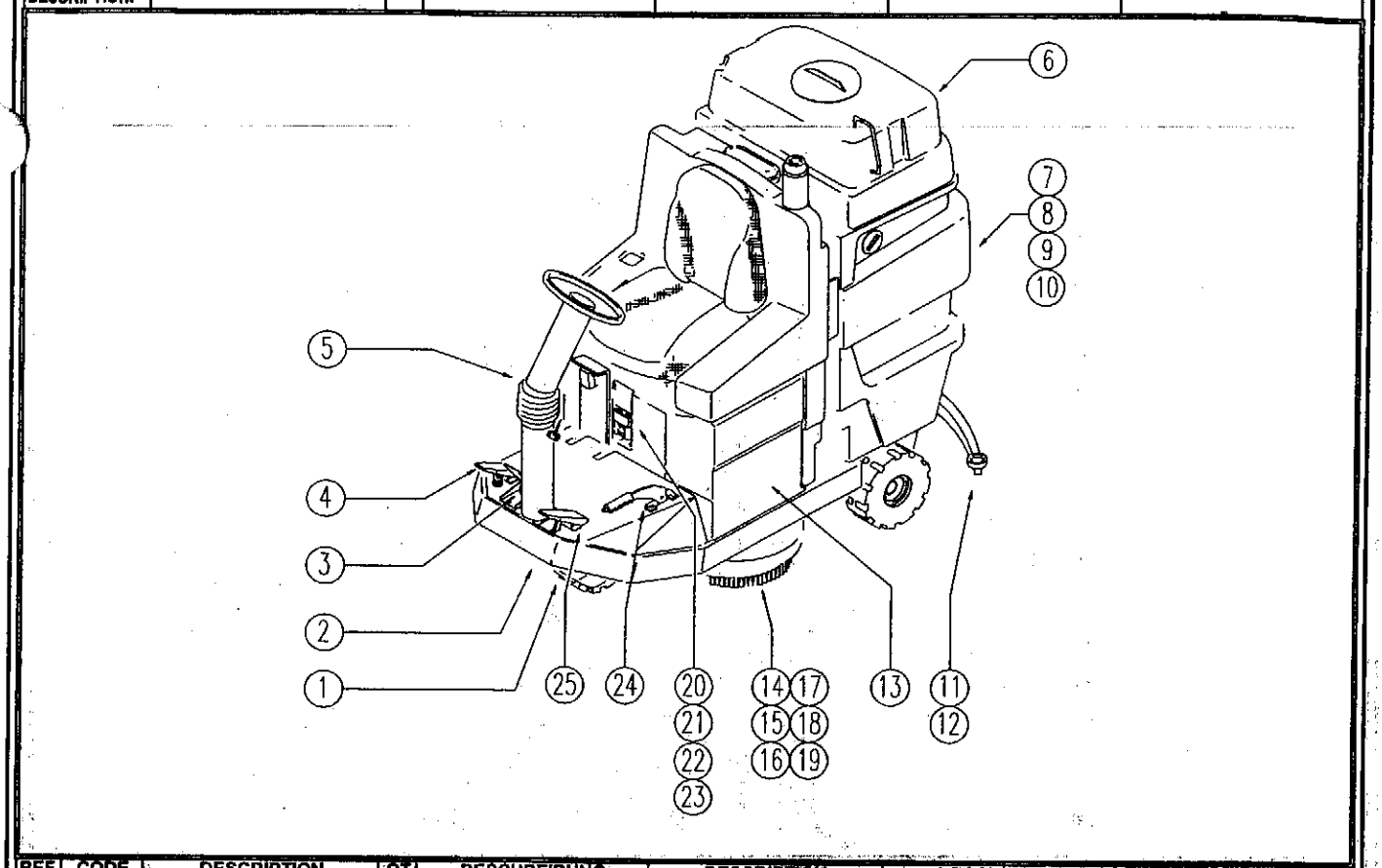

REF	CODE	DESCRIPTION	QT	BESCHREIBUNG	DESCRIPTION	DESCRIPCION	DESCRIZIONE
1	PL1045	WHEEL		RÄDCHEN	ROUE	RUEDA	RUOTA
2	PL1050	CHASSIS		RAHMEN	CADRE	CHASIS	TELAIO
3	PL1052	PEDAL BRAKE		BREMSE	FREIN	FRENO	PEDALE FRENO
4	PL1051	DRIVE		ANTRIEB	TRACTION	TRACCION	TRAZIONE
5	PL1044	STEERING COLUMN		LENKSÄULE	BARRE / TUBE	COLUMNA DE DIRECCIÓN	PIANTONE STERZO
6	PL1216	TANK		TANK	RESERVOIR	TANQUE	SERBATOIO
7	PL1039	TANK-HYDRAULIC UNIT		TANK	RESERVOIR	TANQUE	SERB.: PARTI IDRAULICHE
8	PL1040	TANK: SUCTION		TANK: ANSAUGUNG	RESERVOIR: ASPIRATION	TANQUE: SUCCION	SERBATOIO: ASPIRAZIONE
9	PL1041	TANK-ACCESSORIES		TANK	RESERVOIR	TANQUE	SERB.: ACCESSORI
10	PL1217	TANK-ACCESSORIES		TANK	RESERVOIR	TANQUE	SERB.: ACCESSORI
11	PL1070	SQUEEGEE 95		SAUGFUß 95	SUCEUR 95	ESCURRESUELOS 95	SQUEEGEE 95
12	PL1069	SQUEEGEE LIFT		SAUGFUßHEBEVORRICHTUNG	SOULEVEMENT SUCEUR	LEVANTAMIENTO ESCURRESUELOS	SOL. SQUEEGEE
13	PL1058	BATTERY CASE		BEHÄLTER	CAISSON	CAJA	CASSONE-BATTERIE
14	PL1033	HEAD 95: MOTOR		KOPF 95:MOTOR	TETE 95:MOTEUR	CABEZA 95:MOTOR	TESTATA 95: MOTORE
15	PL1381	HEAD 95:FLAP AND BOX		KOPF 95	TETE 95	CABEZA 95	TESTATA 95: FLAP E CASSETTO
16	PL1034	HEAD 95:PULLEY AXLE		KOPF 95	TETE 95	CABEZA 95	TESTATA 95: ASSE SPAZZOLA
17	PL1048	FRONT HEAD LIFTING		KOPFHEBEVORRICHTUNG	SOULEVEMENT TETE	LEVANTAMIENTO CABEZA	SOLLEVAMENTO ANT. TESTATA
18	PL1047	REAR HEAD LIFTING		KOPFHEBEVORRICHTUNG	SOULEVEMENT TETE	LEVANTAMIENTO CABEZA	SOLLEVAMENTO POST. TESTATA
19	PL1215	HEAD FASTENER		KOPFHALTER	BUTEE TETE	RETEN CABEZA	FERMA TESTATA
20	PL1060BC	ELECTRIC UNIT 1		ELEKTRISCHE GRUPPE 1	GROUPE ELECTRIQUE 1	GRUPO ELECTRICO 1	PARTI ELETTRICHE 1
21	PL1061	ELECTRIC UNIT 2		ELEKTRISCHE GRUPPE 2	GROUPE ELECTRIQUE 2	GRUPO ELECTRICO 2	PARTI ELETTRICHE 2
22	PL1062	ELECTRIC UNIT 3		ELEKTRISCHE GRUPPE 3	GROUPE ELECTRIQUE 3	GRUPO ELECTRICO 3	PARTI ELETTRICHE 3
23	PL1063	ELECTRIC UNIT 4		ELEKTRISCHE GRUPPE 4	GROUPE ELECTRIQUE 4	GRUPO ELECTRICO 4	PARTI ELETTRICHE 4
24	PL1053	HAND BRAKE		BREMSE	FREIN	FRENO	FRENO A MANO
25	PL1066	SQUEEGEE PEDAL		PEDAL	PEDALE	PEDAL	PEDALE SQUEEGEE
	PL1237	BRUSH		BÜRSTE	BROSSE	CEPILLO	SPAZZOLE
	PL1277	EXTERNAL PARTS		EXTERNE TEILE	EXTERNES PARTIES	EXTERNAS PARTES	PARTI ESTERNE
	WD27126-2	WIRING DIAGRAM		SCHALTPLAN	SCHEMA ELECTRIQUE	ESQUEMA ELECTRICO	SCHEMA ELETTRICO

CODE: pl1045 ab SN from 98D85

DESCRIPTION:	WHEEL		RÄDCHEN	ROUE	RUEDA	RUOTA

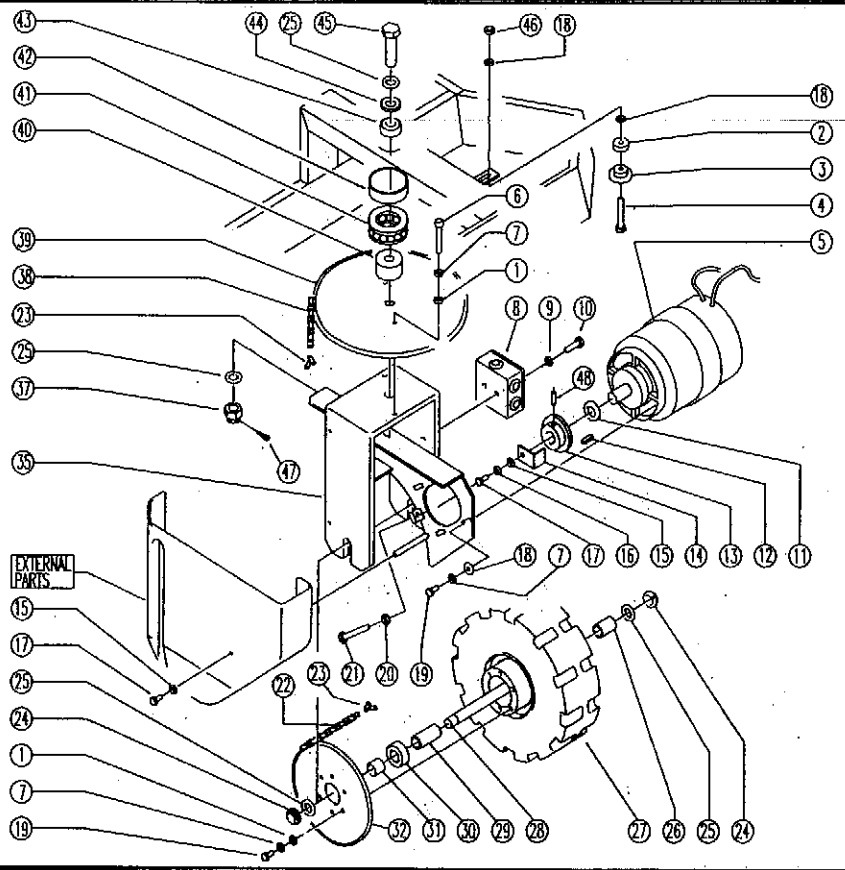

REF	CODE	DESCRIPTION	QT	BESCHREIBUNG	DESCRIPTION	DESCRIPCION	DESCRIZIONE
1	SL06003	WASHER	14	SCHEIBE	RONDELLE	ARANDELA	RONDELLA
2	SL07451	SPACER	1	DISTANZSTÜCK	ENTRETOISE	ESPESOR	DISTANZIALE
3	SL10057	CHAIN TIGHTENER	1	KETTENSPANNER	TENDEUR DE CHAINE	TENSOR DE CADENA	TENDICATENA
4	SL04164	SCREW	1	SCHRAUBE	VIS	TORNILLO	VITE
5	SL02112	GEARMOTOR	1	GETRIEBEMOTOR	MOTO-REDUCTEUR	MOTORREDUCTOR	MOTORIDUTTORE
6	SL04192	SCREW	2	SCHRAUBE	VIS	TORNILLO	VITE
7	SL06002	WASHER	12	SCHEIBE	RONDELLE	ARANDELA	RONDELLA
8	SL23468	ELECT. HOUSING	1	VERTEILERDOSE	BOITE ELECTRIQUE	CAJA ELECTRICA	SCATOLA
9	SL06019	WASHER	2	SCHEIBE	RONDELLE	ARANDELA	RONDELLA
10	SL04079	SCREW	2	SCHRAUBE	VIS	TORNILLO	VITE
11	SL06066	WASHER	1	SCHEIBE	RONDELLE	ARANDELA	RONDELLA
12	SL11110	TONGUE	1	LAPPEN	LANGUETTE	LINGUETE	CHIAVETTA
13	SL10054	PINION	1	RITZEL	PIGNON	PIÑON	PIGNONE
14	SL09706	PLATE	1	PLATTE	PLAQUE	PLACA	PIASTRINA
15	SL06004	WASHER	4	SCHEIBE	RONDELLE	ARANDELA	RONDELLA
16	SL06001	WASHER	1	SCHEIBE	RONDELLE	ARANDELA	RONDELLA
17	SL04190	SCREW	3	SCHRAUBE	VIS	TORNILLO	VITE
18	SL06017	WASHER	5	SCHEIBE	RONDELLE	ARANDELA	RONDELLA
19	SL04023	SCREW	10	SCHRAUBE	VIS	TORNILLO	VITE
20	SL05004	NUT	1	MUTTER	ECROU	TUERCA	DADO
21	SL04156	SCREW	1	SCHRAUBE	VIS	TORNILLO	VITE
22	SL16023	CHAIN	1	KETTE	CHAINE	CADENA	CATENA
23	SL16027	GRID	2	GLIED	MAILLE	MALLA	MAGLIA
24	SL05052	NUT	2	ZWINGE	ANNEUAU DE FIXATION	ANILLO	GHIERA
25	SL06027	WASHER	4	SCHEIBE	RONDELLE	ARANDELA	RONDELLA
26	SL07265	SPACER	1	DISTANZSTÜCK	ENTRETOISE	ESPESOR	DISTANZIALE
27	SL08031	WHEEL	1	RÄDCHEN	ROUE	RUEDA	RUOTA
28	SL07263	PIN	1	STIFT	PIVOT	EJE	PERNO
29	SL07266	SPACER	1	DISTANZSTÜCK	ENTRETOISE	ESPESOR	DISTANZIALE
30	SL12036	BEARING	1	LAGER	PALIER	COJINETE	CUSCINETTO
31	SL07267	SPACER	1	DISTANZSTÜCK	ENTRETOISE	ESPESOR	DISTANZIALE
32	SL10055	CROWN	1	KRANZ	COURONNE	CORONA	CORONA
35	SL09687	FORK	1	GABEL	FOURCH	HORQUILLA	FORCELLA
37	SL05079	NUT	1	MUTTER	ECROU	TUERCA	DADO
38	SL16026	CHAIN	1	KETTE	CHAINE	CADENA	CATENA
39	SL10034	CROWN	1	KRANZ	COURONNE	CORONA	CORONA
40	SL07096	SPACER	1	DISTANZSTÜCK	ENTRETOISE	ESPESOR	DISTANZIALE
41	SL12014	BEARING	1	LAGER	PALIER	COJINETE	RALLA
42	SL03461	GUARD	1	SCHUTZ	PROTECTION	PROTECCION	PROTEZIONE
43	SL12015	BEARING	1	LAGER	PALIER	COJINETE	CUSCINETTO
44	SL12021	RING	1	SPERRING	BAGUE	ANILLO	ANELLO
45	SL07450	SCREW	1	SCHRAUBE	VIS	TORNILLO	VITE
46	SL05001	NUT	1	MUTTER	ECROU	TUERCA	DADO
47	SL11121	SPLIT PIN	1	SPLINT	GOUPILLE	PASADOR HENDIDO	COPIGLIA
48	SL11048	SPLIT PIN	1	SPLINT	GOUPILLE	PASADOR HENDIDO	GRANO
-	SL07256	MOTOR DRUM	1	TROMMEL FÜR MOTOR	TAMBOUR POUR MOTEUR	TAMBOR PARA MOTOR	TAMBURO

CODE: pl1050 ad from SN 00A001

DESCRIPTION:	FRAME	RAHMEN	CADRE	CHASÍS	TELAIO

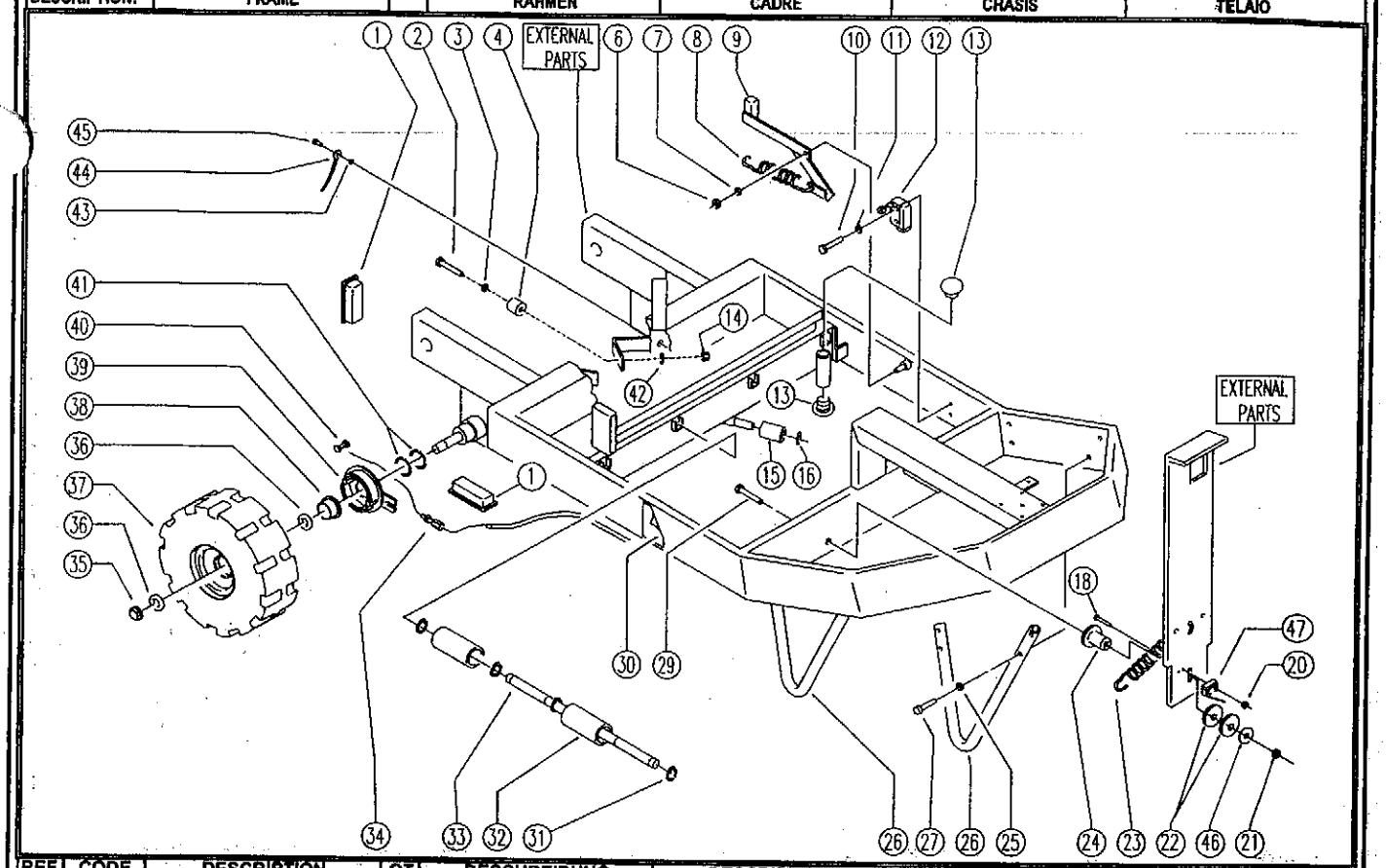

REF	CODE	DESCRIPTION	QT	BESCHREIBUNG	DESCRIPTION	DESCRIPCION	DESCRIZIONE
1	SL14198	TERMINAL	4	ENDVERSCHLUSS	BORNE	TERMINAL	TERMINALE
2	SL04073	SCREW	2	SCHRAUBE	VIS	TORNILLO	VITE
3	SL06039	WASHER	2	SCHEIBE	RONDELLE	ARANDELA	RONDELLA
4	SL03103	PLUG / STOPPER	2	PUFFER	TAMPON	TAPON / ALMOHADILLA	TAMPONE
6	SL05001	NUT	1	MUTTER	ECROU	TUERCA	DADO
7	SL06003	WASHER	1	SCHEIBE	RONDELLE	ARANDELA	RONDELLA
8	SL13011	SPRING	1	FEDER	RESSORT	RESORTE	MOLLA
9	SL09696	LEVER	1	HEBEL	LEVIER	PALANCA	LEVA
10	SL04107	SCREW	2	SCHRAUBE	VIS	TORNILLO	VITE
11	SL06019	WASHER	2	SCHEIBE	RONDELLE	ARANDELA	RONDELLA
12	SL23200	MICROSWITCH	1	MIKROSCHALTER	MICRO-INTERRUPTEUR	MICROINTERRUPTOR	MICROINTERRUTTORE
13	SL14217	PLUG	6	DECKEL	BOUCHON	TAPON	TAPPO
14	SL05011	NUT	2	MUTTER	ECROU	TUERCA	DADO
15	SL07325	ROLLER	1	ROLLE	ROULEAU / GALET	RODILLO	RULLO
16	SL11021	SEEGER	1	SEEGER	SEEGER	SEEGER	SEEGER
18	SL04086	SCREW	2	SCHRAUBE	VIS	TORNILLO	VITE
20	SL05031	NUT	1	MUTTER	ECROU	TUERCA	DADO
21	SL05039	NUT	1	MUTTER	ECROU	TUERCA	DADO
22	SL06073	WASHER	2	SCHEIBE	RONDELLE	ARANDELA	RONDELLA
23	SL13013	SPRING	2	FEDER	RESSORT	RESORTE	MOLLA
24	SL07371	SPACER	1	DISTANZSTÜCK	ENTRETOISE	ESPESOR	DISTANZIALE
25	SL06002	WASHER	6	SCHEIBE	RONDELLE	ARANDELA	ROND.
26	SL39012	HOSE	2	SCHLAUCH	TUYAU	TUBO	TUBO
27	SL04264	SCREW	8	SCHRAUBE	VIS	TORNILLO	VITE
29	SL04143	SCREW	1	SCHRAUBE	VIS	TORNILLO	VITE
30	SL25602	LABEL	1	ETIKETT	ETIQUETTE	ETIQUETA	ETICHETTA
31	SL11100	SEEGER	16	SEEGER	SEEGER	SEEGER	SEEGER
32	SL07351	ROLLER	8	ROLLE	ROULEAU / GALET	RODILLO	RULLO
33	SL07300	PIN	4	STIFT	PIVOT	EJE	PERNO
34	SL14222	REGISTER	2	REGLER	REGISTRE	REGISTRO	REGISTRO
35	SL05052	NUT	2	ZWINGE	ANNEUAU DE FIXATION	ANILLO	GHIERA
36	SL06027	WASHER	4	SCHEIBE	RONDELLE	ARANDELA	RONDELLA
37	SL08030	WHEEL	2	RÄDCHEN	ROUE	RUEDA	RUOTA
38	SL07275	BUSHING	2	BUCHSE	DOUILLE	BULLON	BOCCOLA
39	SL14192	BLOCK	2	BREMSBACKE	SABOT DE FREIN	ZAPATA	CEPPO
40	SL14031	CLAMP	2	SCHELLE	COLLIER	ABRAZADERA	MORSETTO
41	SL06075	WASHER	4	SCHEIBE	RONDELLE	ARANDELA	RONDELLA
42	SL06004	WASHER	2	SCHEIBE	RONDELLE	ARANDELA	RONDELLA
43	SL06083	WASHER	1	SCHEIBE	RONDELLE	ARANDELA	RONDELLA
44	SL23593	CABLE	1	KABEL	CABLE	CABLE	CAVO
45	SL04010	SCREW	1	SCHRAUBE	VIS	TORNILLO	VITE
46	SL06069	WASHER	1	SCHEIBE	RONDELLE	ARANDELA	RONDELLA
47	SL23021	MICROSWITCH	1	MIKROSCHALTER	MICRO-INTERRUPTEUR	MICROINTERRUPTOR	MICROINTERRUTTORE

CODE:					pl1052 ac SN from 00E000
DESCRIPTION:	BRAKE	BREMSE	FREIN	FRENO	PEDALE FRENO

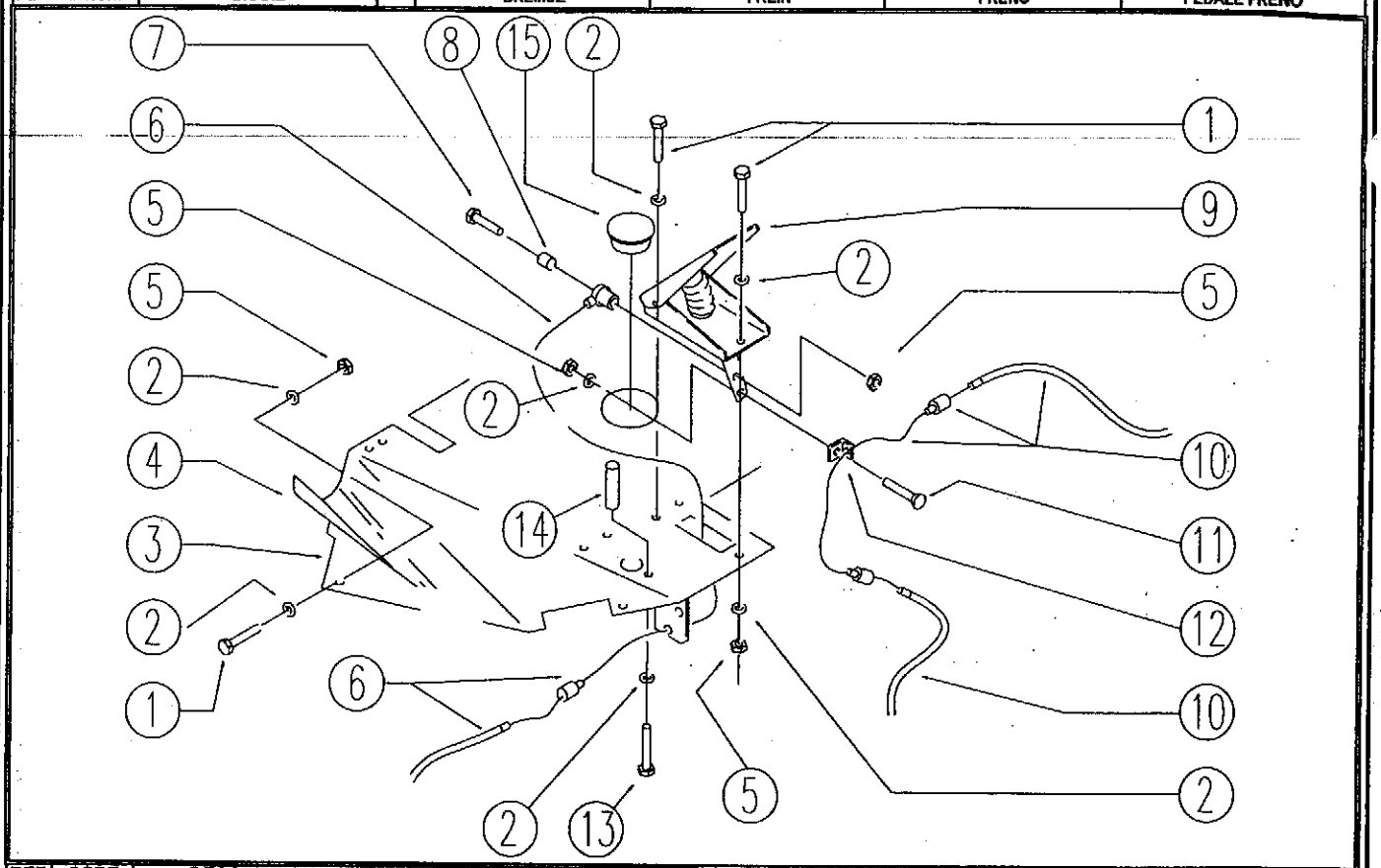

REF	CODE	DESCRIPTION	QT	BESCHREIBUNG	DESCRIPTION	DESCRIPCION	DESCRIZIONE
1	SL04048	SCREW	10	SCHRAUBE	VIS	TORNILLO	VITE
2	SL06004	WASHER	22	SCHEIBE	RONDELLE	ARANDELA	RONDELLA
3	SL09824	FOOTBOARD	1	TRITTBRETT	ESTRADE	PLATAFORMA	PEDANA
4	SL03242	COVERING / COATING	1	VERKLEIDUNG	REVETEMENT	REVESTIMIENTO	RIVESTIMENTO
5	SL05011	NUT	12	MUTTER	ECROU	TUERCA	DADO
6	SL14210	CABLE	1	KABEL	CABLE	CABLE	CAVO
7	SL04190	SCREW	1	SCHRAUBE	VIS	TORNILLO	VITE
8	SL07318	BUSHING	1	BUCHSE	DOUILLE	BULLON	BOCCOLA
9	SL22011	TREADLE	1	PEDAL	PEDALE	PEDAL	PEDALE
10	SL14216	CABLE	1	KABEL	CABLE	CABLE	CAVO
11	SL04259	SCREW	1	SCHRAUBE	VIS	TORNILLO	VITE
12	SL09723	BLOCK / LOCK	1	SPERRE	BLOCAGE / VERROUILLAGE	BLOQUE / BLOQUEO	BLOCCO
13	SL04190	SCREW	1	SCHRAUBE	VIS	TORNILLO	VITE
14	SL07333	SPACER	1	DISTANZSTÜCK	ENTRETOISE	ESPESOR	DISTANZIALE
15	SL14240	CAP	1	STOPFEN, VERSCHLUSS	BOUCHON	TAPON	TAPPO

CODE: pl1051aa SN from 96D673

DESCRIPTION:	DRIVE		ANTRIEB	TRACTION	TRACCION	TRAZIONE

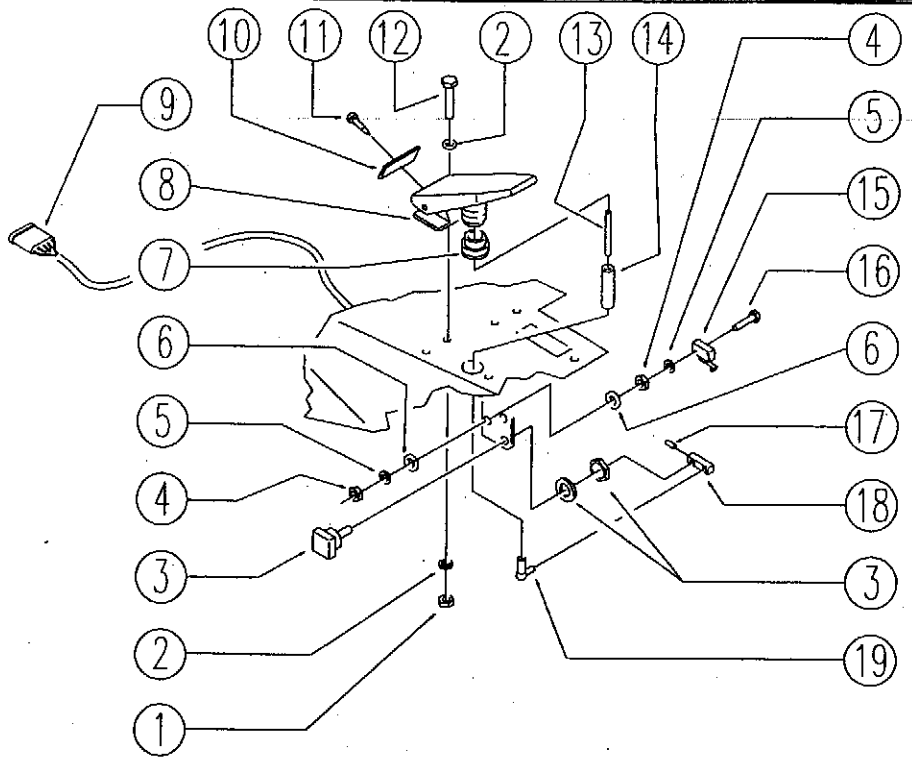

REF	CODE	DESCRIPTION	QT	BESCHREIBUNG	DESCRIPTION	DESCRIPCION	DESCRIZIONE
1	SL05011	NUT	2	MUTTER	ECROU	TUERCA	DADO
2	SL06004	WASHER	4	SCHEIBE	RONDELLE	ARANDELA	RONDELLA
3	SL23124	POTENTIOMETER	1	POTENTIOMETER	POTENTIOMETRE	POTENCIOMETRO	POTENZIOMETRO
4	SL05009	NUT	4	MUTTER	ECROU	TUERCA	DADO
5	SL06024	WASHER	4	SCHEIBE	RONDELLE	ARANDELA	RONDELLA
6	SL06019	WASHER	4	SCHEIBE	RONDELLE	ARANDELA	ROSETTA
7	SL07269	BUSHING	1	BUCHSE	DOUILLE	BULLON	BOCCOLA
8	SL22012	TREADLE	1	PEDAL	PEDALE	PEDAL	PEDALE
9	SL23928	WIRING	1	VERKABELUNG	CABLAGE	CABLEO	CABLAGGIO
10	SL17453	SPACER	1	DISTANZSTÜCK	ENTRETOISE	ESPESOR	SPESSORE
11	SL04173	SCREW	1	SCHRAUBE	VIS	TORNILLO	VITE
12	SL04048	SCREW	2	SCHRAUBE	VIS	TORNILLO	VITE
13	SL04250	BAR	1	STAB	BARRE	BARRA	BARRA
14	SL07334	SPACER	1	DISTANZSTÜCK	ENTRETOISE	ESPESOR	DISTANZ.
15	SL23021	MICROSWITCH	1	MIKROSCHALTER	MICRO-INTERRUPTEUR	MICROINTERRUPTOR	MICROINTERRUTTORE
16	SL04016	SCREW	2	SCHRAUBE	VIS	TORNILLO	VITE
17	SL11023	SPLIT PIN	1	SPLINT	GOUPILLE	PASADOR HENDIDO	GRANO
18	SL09505	LEVER	1	HEBEL	LEVIER	PALANCA	LEVA
19	SL22005	ARTICULATION	1	GELENK	JOINT	ARTICULACIÓN	SNODO

CODE:	pl1044 aa SN from 96D673

DESCRIPTION:	STEERING COLUMN	LENKSÄULE	BARRE / TUBE	COLUMNA DE DIRECCIÓN	PIANTONE

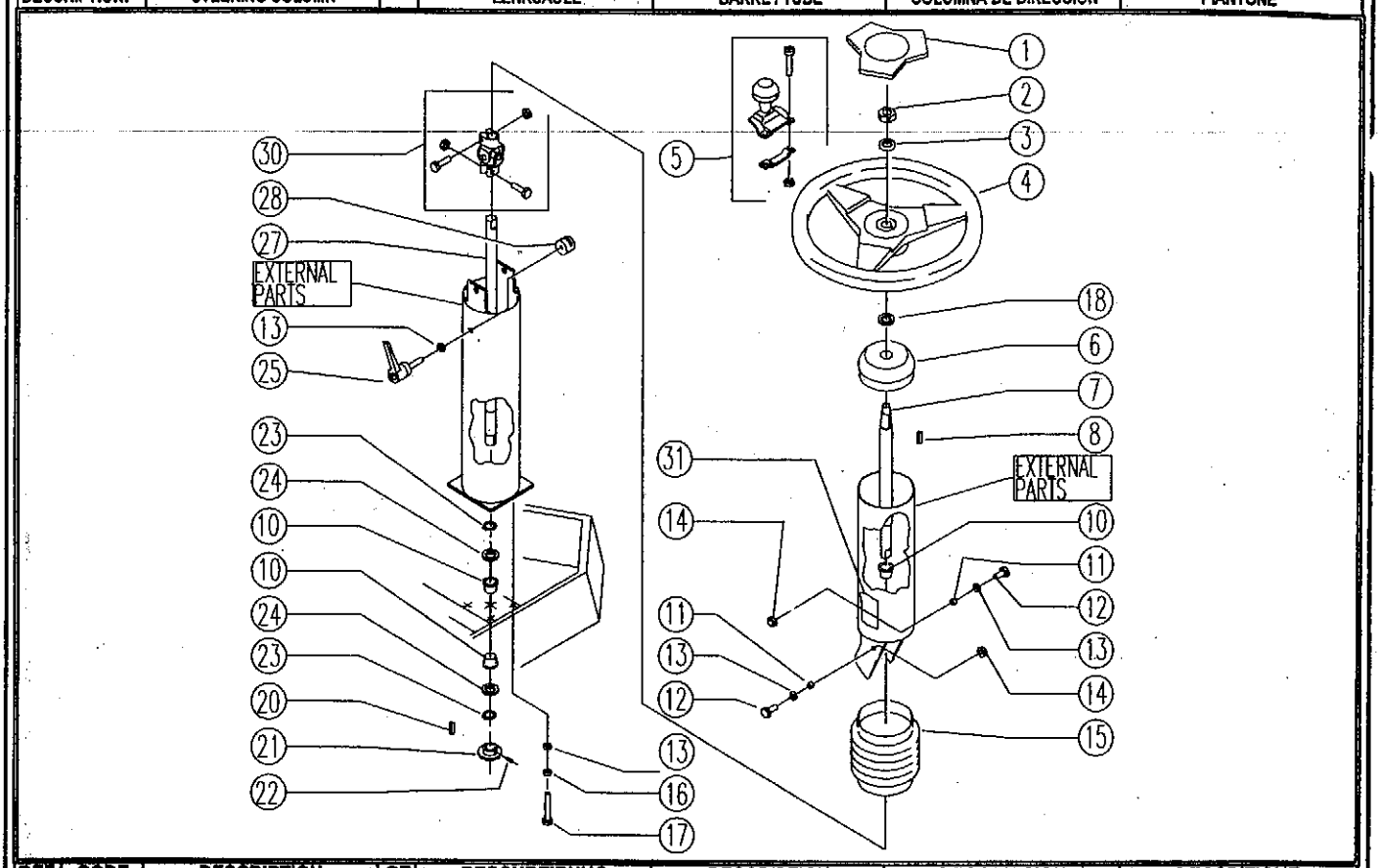

REF	CODE	DESCRIPTION	QT	BESCHREIBUNG	DESCRIPTION	DESCRIPCION	DESCRIZIONE
1	SL14194	CAP	1	STOPFEN	BOUCHON	TAPA	TAPPO
2	SL05037	NUT	1	MUTTER	ECROU	TUERCA	DADO
3	SL06029	WASHER	1	SCHEIBE	RONDELLE	ARANDELA	RONDELLA
4	SL14195	STEERING WHEEL	1	LENKRAD	VOLANT	VOLANTE	VOLANTE
5	SL14211	HANDLE	1	KNAUF	POIGNEE	PERILLA	POMELLO
6	SL07268	CAP	1	STOPFEN	BOUCHON	TAPA	TAPPO
7	SL07260	SHAFT	1	WELLE	ARBRE	ARBOL	ALBERO
8	SL11010	KEY	1	SCHLUSSEL	CLE	LLAVE	CHIAVETTA
10	SL12037	BEARING	3	LAGER	PALIER	COJINETE	CUSCINETTO
11	SL07062	SPACER	2	DISTANZSTÜCK	ENTRETOISE	ESPESOR	DISTANZIALE
12	SL04023	SCREW	2	SCHRAUBE	VIS	TORNILLO	VITE
13	SL06003	WASHER	7	SCHEIBE	RONDELLE	ARANDELA	RONDELLA
14	SL05001	NUT	2	MUTTER	ECROU	TUERCA	DADO
15	SL03230	PROTECTIVE COVER	1	SCHUTZGUMMI	CAOUTCHOUC DE PROTECTION	FUELLE	SOFFIETTO
16	SL06002	WASHER	4	SCHEIBE	RONDELLE	ARANDELA	RONDELLA
17	SL04156	SCREW	4	SCHRAUBE	VIS	TORNILLO	VITE
18	SL06096	WASHER	1	UNTERLEGSCHEIBE	RONDELLE	ARANDELA	RONDELLA
20	SL11026	TONGUE	1	LAPPEN	LANGUETTE	LINGUETE	LINGUETTA
21	SL10056	PINION	1	RITZEL	PIGNON	PIÑON	PIGNONE
22	SL11048	GRAIN	1	STIFT	VIS SANS TETE	GRANO	GRANO
23	SL11094	RING	2	SPERRING	BAGUE	ANILLO	ANELLO
24	SL06074	WASHER	2	SCHEIBE	RONDELLE	ARANDELA	ROND.
25	SL20044	LEVER	1	HEBEL	LEVIER	PALANCA	LEVA
27	SL07259	SHAFT	1	WELLE	ARBRE	ARBOL	ALBERO
28	SL07270	BLOCK / LOCK	1	SPERRE	BLOCAGE / VERROUILLAGE	BLOQUE / BLOQUEO	BLOCCO
30	SL12023	JOINT	1	VERBINDUNG, KUPPLUNG	JOINT	JUNTA	GIUNTO
31	SL25559	LABEL	1	ETIKETT	ETIQUETTE	ETIQUETA	ETICHETTA

CODE: pl1216 ad SN from 00J100

DESCRIPTION:	TANK		TANK	RESERVOIR	TANQUE	SERBATOIO

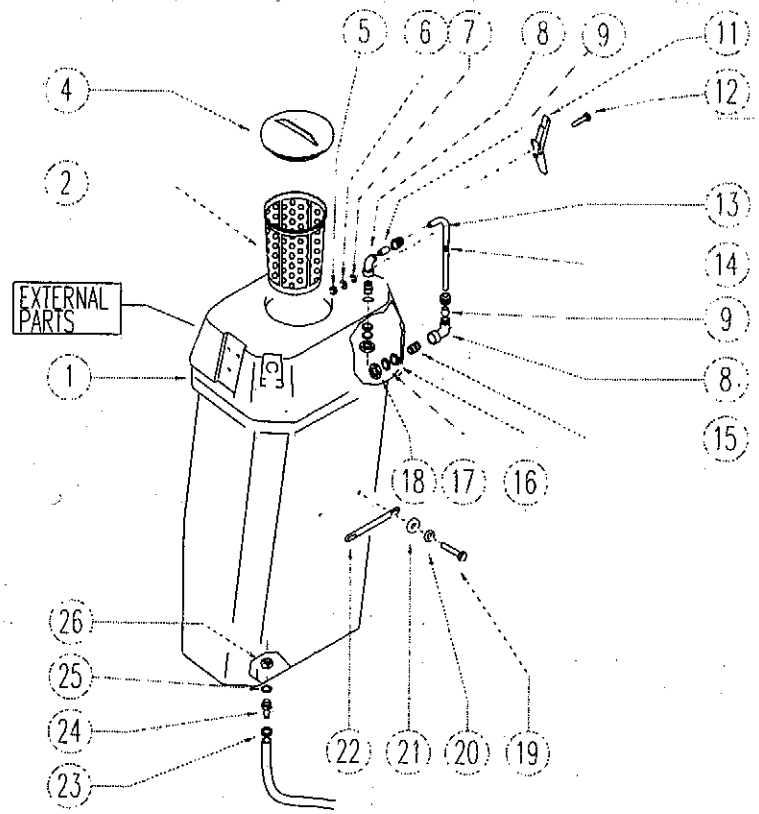

REF	CODE	DESCRIPTION	QT	BESCHREIBUNG	DESCRIPTION	DESCRIPCION	DESCRIZIONE
1	SL03417	GASKET	1	DICHTUNG	JOINT	EMPAQUETADURA	GUARNIZIONE
2	SL18352	FILTER	1	FILTER	FILTRE	FILTRO	FILTRO
4	SL17468	LID	1	DECKEL	COUVERCLE	TAPA	COPERCHIO
5	SL05016	NUT	6	MUTTER	ECROU	TUERCA	DADO
6	SL06038	WASHER	6	SCHEIBE	RONDELLE	ARANDELA	RONDELLA
7	SL03116	GASKET	6	DICHTUNG	JOINT	EMPAQUETADURA	O.R.
8	SL18392	UNION / CONNECTOR	2	ANSCHLUSS	RACCORD	UNIÓN / CONECTOR	RACCORDO
9	SL19323	HOSE	2	SCHLAUCH	TUYAU	TUBO FLEXIBLE	TUBO
11	SL14328	LOCK	2	VERSCHLUSS	FERMETURE / VERROUILLAGE	CIERRE	CHIUSURA
12	SL04244	SCREW	6	SCHRAUBE	VIS	TORNILLO	VITE
13	SL19324	HOSE	1	SCHLAUCH	TUYAU	TUBO FLEXIBLE	TUBO
14	SL14347	SPHERE / BALL	1	KUGEL	BILLE	ESFERA	SFERA
15	SL18391	NIPPLE	2	NIPPEL	NIPPLE	ENTRERROSCA	NIPPLO
16	SL03400	GASKET	2	DICHTUNG	JOINT	EMPAQUETADURA	GUARNIZIONE
17	SL06099	WASHER	2	SCHEIBE	RONDELLE	ARANDELA	RONDELLA
18	SL18093	NUT	2	MUTTER	ECROU	TUERCA	DADO
19	SL04055	SCREW	2	SCHRAUBE	VIS	TORNILLO	VITE
20	SL06038	WASHER	2	SCHEIBE	RONDELLE	ARANDELA	RONDELLA
21	SL07394	BUSHING / BUSH	2	BUCHSE	DOUILLE	CASQUILLO / FORRO	BOCCOLA
22	SL17529	HANDLE	1	HANDGRIFF	POIGNEE	PERILLA / ASA	MANIGLIA
23	SL14036	CLAMP	1	SCHELLE	BANDE	ABRAZADERA	FASCETTA
24	SL07518	UNION / CONNECTOR	1	ANSCHLUSS	RACCORD	UNIÓN / CONECTOR	RESCA
25	SL03400	GASKET	1	DICHTUNG	JOINT	EMPAQUETADURA	GUARNIZIONE
26	SL18093	NUT	6	MUTTER	ECROU	TUERCA	DADO

CODE:	pl1039 ad SN from 00G100

DESCRIPTION:	HYDRAULIC UNIT	HYDRAULISCHE GRUPPE	GROUPE HYDRAULIQUE	GRUPO HIDRAULICO	GRUPPO IDRAULICO

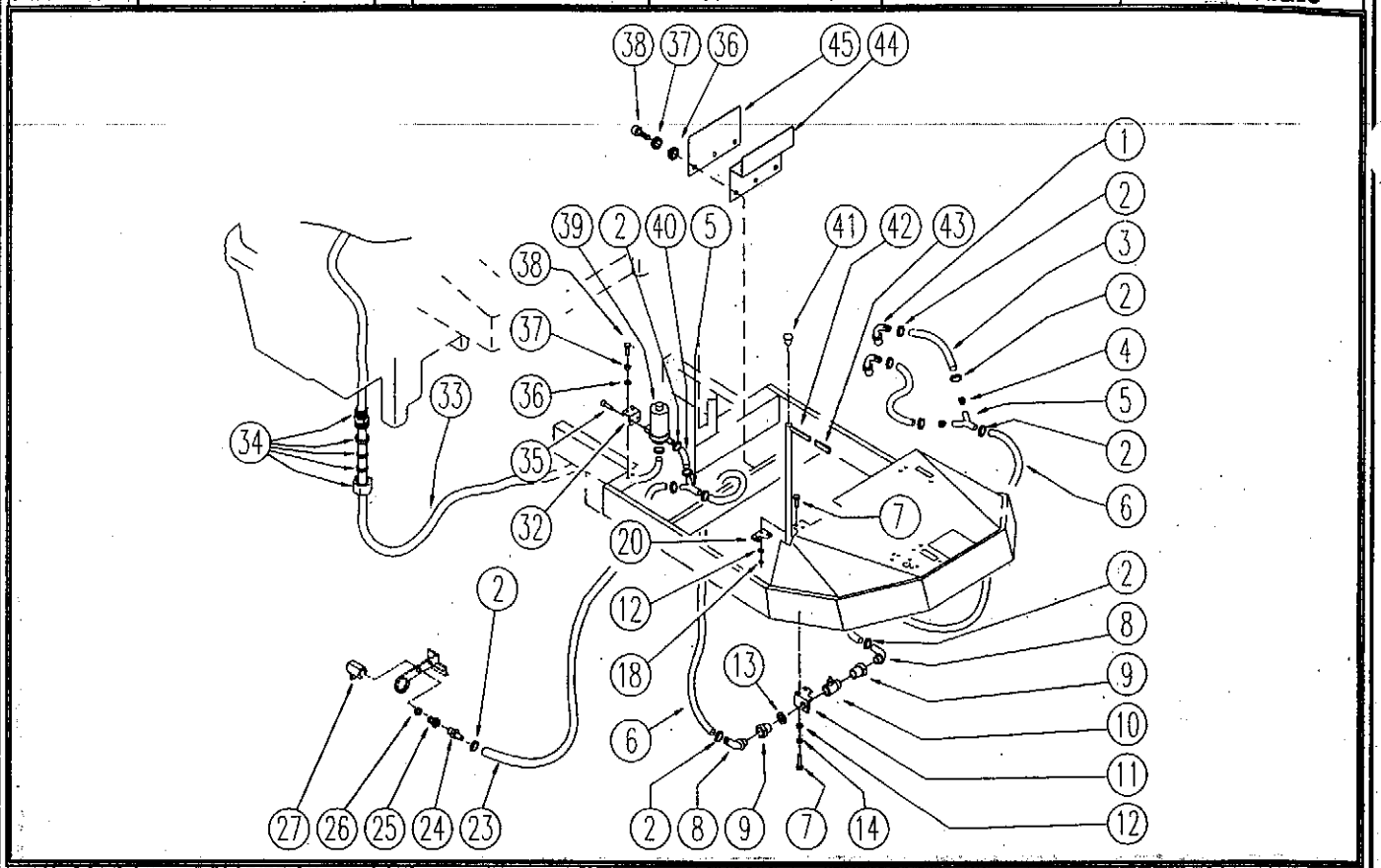

REF	CODE	DESCRIPTION	QT	BESCHREIBUNG	DESCRIPTION	DESCRIPCION	DESCRIZIONE
1	SL18232	UNION / CONNECTOR	2	ANSCHLUSS	RACCORD	UNIÓN / CONECTOR	RACCORDO
2	SL14036	CLAMP	13	SCHELLE	COLLIER	ABRAZADERA	FASCETTA
3	SL19283	HOSE	2	SCHLAUCH	TUYAU	TUBO	TUBO
4	SL07375	UNION / CONNECTOR	2	ANSCHLUSS	RACCORD	UNIÓN / CONECTOR	RACCORDO
5	SL18367	CONNECTOR	2	VERBINDER	CONNECTEUR	CONECTOR	CONNETTORE
6	SL19284	HOSE	2	SCHLAUCH	TUYAU	TUBO	TUBO
7	SL04048	SCREW	4	SCHRAUBE	VIS	TORNILLO	VITE
8	SL18341	UNION / CONNECTOR	2	ANSCHLUSS	RACCORD	UNIÓN / CONECTOR	RACCORDO
9	SL18109	REDUCTION	2	UNTERSETZUNG	REDUCTION	REDUCCIÓN	RIDUZIONE
10	SL18384	TAP	1	HAHN	ROBINET	GRIFO	RUBINETTO
11	SL09958	SUPPORT	1	HALTERUNG	SUPPORT	SOPORTE	SUPPORTO
12	SL06004	WASHER	4	UNTERLEGSCHEIBE	RONDELLE	ARANDELA	RONDELLA
13	SL06061	WASHER	1	UNTERLEGSCHEIBE	RONDELLE	ARANDELA	RONDELLA
14	SL06001	WASHER	2	UNTERLEGSCHEIBE	RONDELLE	ARANDELA	RONDELLA
18	SL05041	NUT	2	MUTTER	ECROU	TUERCA	DADO
20	SL09959	BLOCK / LOCK	1	SPERRE	BLOCAGE / VERROUILLAGE	BLOQUE / BLOQUEO	BLOCCO
23	SL19328	HOSE	1	SCHLAUCH	TUYAU	TUBO	TUBO
24	SL18383	UNION / CONNECTOR	1	ANSCHLUSS	RACCORD	UNIÓN / CONECTOR	RACCORDO
25	SL18109	REDUCTION	1	UNTERSETZUNG	REDUCTION	REDUCCIÓN	RIDUZIONE
26	SL06061	WASHER	1	UNTERLEGSCHEIBE	RONDELLE	ARANDELA	RONDELLA
27	SL18380	TAP	1	HAHN	ROBINET	GRIFO	RUBINETTO
32	SL09961	SUPPORT	1	HALTERUNG	SUPPORT	SOPORTE	SUPPORTO
33	SL19322	HOSE	1	SCHLAUCH	TUYAU	TUBO	TUBO
34	GR18360	UNION / CONNECTOR	1	ANSCHLUSS	RACCORD	UNIÓN / CONECTOR	RACCORDO
35	SL04101	SCREW	2	SCHRAUBE	VIS	TORNILLO	VITE
36	SL06019	WASHER	5	UNTERLEGSCHEIBE	RONDELLE	ARANDELA	RONDELLA
37	SL06021	WASHER	5	UNTERLEGSCHEIBE	RONDELLE	ARANDELA	RONDELLA
38	SL04065	SCREW	5	SCHRAUBE	VIS	TORNILLO	VITE
39	SL02128	PUMP	1	PUMPE	POMPE	BOMBA	POMPA
40	SL19289	HOSE	1	SCHLAUCH	TUYAU	TUBO	TUBO
41	SL14242	CAP	1	STOPFEN, VERSCHLUSS	BOUCHON	TAPÓN	TAPPO
42	SL09960	LEVER	1	HEBEL	LEVIER	PALANCA	LEVA
43	SL20021	HANDGRIP	1	HANDGRIFF	MANCHE	EMPUÑADURA	IMPUGNATURA
44	SL39054	PLATE	1	PLATTE	PLAQUE	PLACA	PIASTRA
45	SL39055	PLATE	1	PLATTE	PLAQUE	PLACA	PIASTRA

CODE:						pl1040 ae SN from 00E200
DESCRIPTION:	TANK : SUCTION		TANK:ANSAUGUNG	RESERVOIR : ASPIRATION	TANQUE: SUCCIÓN	SERBATOIO: ASPIRAZIONE

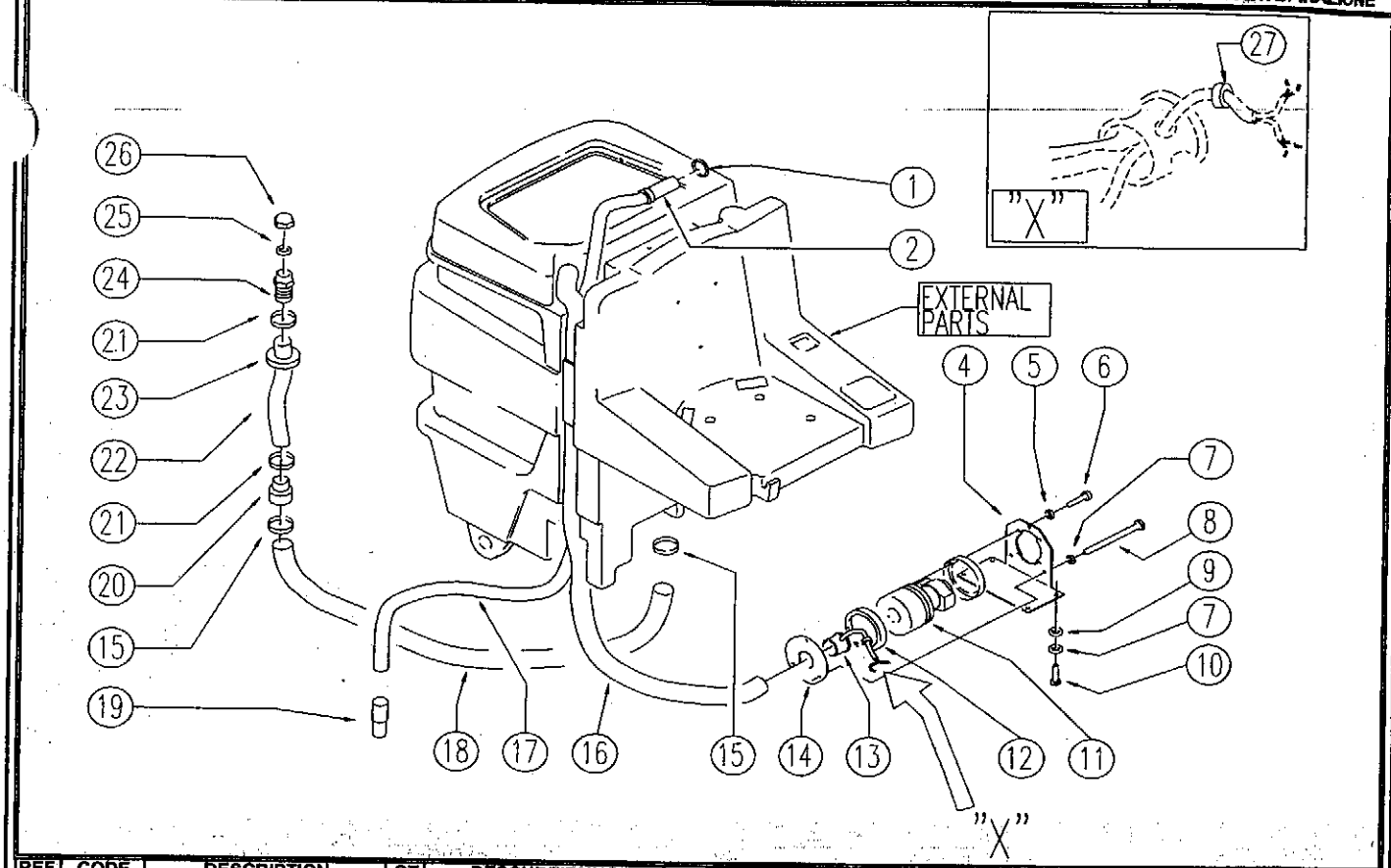

REF.	CODE	DESCRIPTION	QT	BESCHREIBUNG	DESCRIPTION	DESCRIPCION	DESCRIZIONE
1	SL03201	GASKET	1	DICHTUNG	JOINT	EMPAQUETADURA	GUARNIZIONE
2	SL17362	SLEEVE	1	MUFFE	MANCHON	MANGUITO	MANICOTTO
4	SL09684	SUPPORT	1	HALTERUNG	SUPPORT	SOPORTE	SUPPORTO
5	SL06004	WASHER	4	SCHEIBE	RONDELLE	ARANDELA	RONDELLA
6	SL04223	SCREW	4	SCHRAUBE	VIS	TORNILLO	VITE
7	SL06001	WASHER	7	SCHEIBE	RONDELLE	ARANDELA	RONDELLA
8	SL04247	SCREW	3	SCHRAUBE	VIS	TORNILLO	VITE
9	SL06015	WASHER	4	SCHEIBE	RONDELLE	ARANDELA	RONDELLA
10	SL04190	SCREW	4	SCHRAUBE	VIS	TORNILLO	VITE
11	SL02303-Q	ASPIRATOR	1	SAUGER	ASPIRATEUR	ASPIRADOR	MOTORE ASPIRAZIONE
12	SL03159	GASKET	2	DICHTUNG	JOINT	EMPAQUETADURA	GUARNIZIONE
13	SL17565	CONNECTOR	1	ANSCHLUSS	RACCORD	EMPALME	ATTACCO
14	SL09685	FLANGE	1	FLANSCH	BRIDE	ESTRIBO	FLANGIA
15	SL14214	CLAMP	2	SCHELLE	COLLIER	ABRAZADERA	FASCETTA
16	SL19216	HOSE	1	SCHLAUCH	TUYAU	TUBO	TUBO
17	SL19293	HOSE	1	SCHLAUCH	TUYAU	TUBO	TUBO
18	SL19208	HOSE	1	SCHLAUCH	TUYAU	TUBO	TUBO
19	SL14003	SLEEVE	1	MUFFE	MANCHON	MANGUITO	MANICOTTO
20	SL07285	CONNECTOR	1	ANSCHLUSS	RACCORD	EMPALME	RACCORDO
21	SL14079	CLAMP	2	SCHELLE	COLLIER	ABRAZADERA	FASCETTA
22	SL19215	SHEATH	1	MANTEL	GAINE	VAINA	GUAINA
23	SL07286	ADAPTOR	1	PASSTÜCK	ADAPTATEUR	ADAPTADOR	ADATTATORE
24	SL18362	HOSE HOLDER	1	GUMMIHALTERUNG	PORTE-TUYAU	PORTA-TUBO	PORTAGOMMA
25	SL03469	GASKET	1	DICHTUNG	JOINT	EMPAQUETADURA	GUARNIZIONE
26	SL18363	CAP	1	ABLASSTOPPEN	BOUCHON	TAPA	TAPPO
27	SL23044	FAIRLEAD	1	KABELDURCHFUHRUNG	PASSE-CABLE	PASACABLE	PASSACAVO

CODE:					pl1041 af SN from 00E200
DESCRIPTION:	TANK-ACCESSORIES	TANK	RESERVOIR	TANQUE	SERB.; ACCESSORI

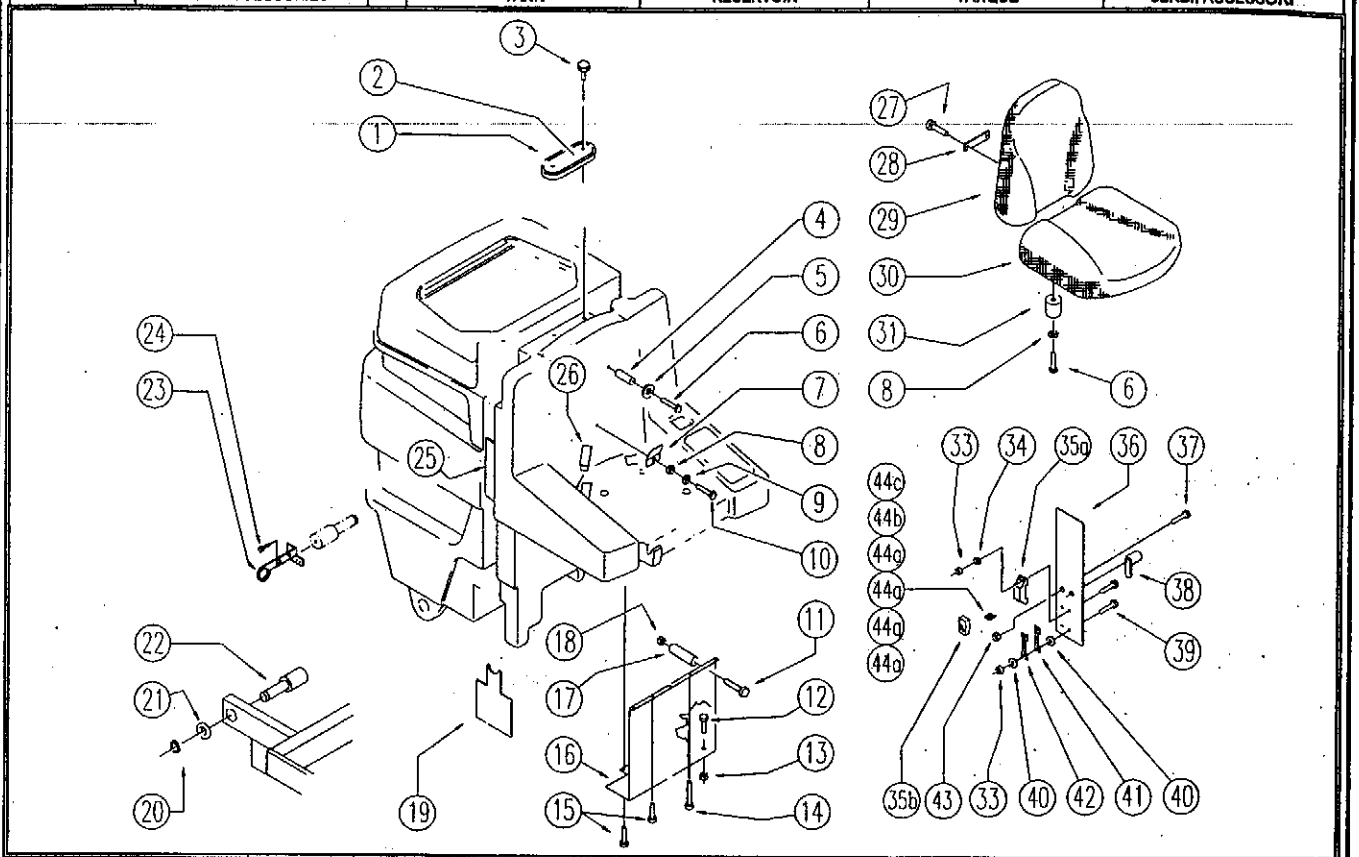

REF	CODE	DESCRIPTION	QT	BESCHREIBUNG	DESCRIPTION	DESCRIPCION	DESCRIZIONE
1	SL03275	GASKET	1	DICHTUNG	JOINT	EMPAQUETADURA	GUARNIZIONE
2	SL17379	LID	1	DECKEL	COUVERCLE	TAPA	COPERCHIO
3	SL20055	HANDWHEEL	2	HANDRAD	VOLANT A MAIN	VOLANTE	VOLANTINO
4	SL07293	SPACER	2	DISTANZSTUCK	ENTRETOISE	ESPESOR	DISTANZIALE
5	SL06015	WASHER	2	SCHEIBE	RONDELLE	ARANDELA	RONDELLA
6	SL04009	SCREW	6	SCHRAUBE	VIS	TORNILLO	VITE
7	SL09540	PLATE	1	PLATTE	PLAQUE	PLACA	PIASTRINA
8	SL06004	WASHER	4	SCHEIBE	RONDELLE	ARANDELA	RONDELLA
9	SL06001	WASHER	1	SCHEIBE	RONDELLE	ARANDELA	RONDELLA
10	SL04180	SCREW	1	SCHRAUBE	VIS	TORNILLO	VITE
11	SL04196	SCREW	1	SCHRAUBE	VIS	TORNILLO	VITE
12	SL04252	SCREW	1	SCHRAUBE	VIS	TORNILLO	VITE
13	SL05039	NUT	1	MUTTER	ECROU	TUERCA	DADO
14	SL04223	SCREW	2	SCHRAUBE	VIS	TORNILLO	VITE
15	SL04173	SCREW	7	SCHRAUBE	VIS	TORNILLO	VITE
16	SL09694	PLATE	1	PLATTE	PLAQUE	PLACA	PIASTRA
17	SL07337	SPACER	1	DISTANZSTUCK	ENTRETOISE	ESPESOR	DISTANZIALE
18	SL05011	NUT	1	MUTTER	ECROU	TUERCA	DADO
19	SL17499-2	PANEL	1	PLATTE	TABLEAU	PANEL	PANNELLO
20	SL11108	RING	2	SPERRING	BAGUE	ANILLO	ANELLO
21	SL06060	WASHER	2	SCHEIBE	RONDELLE	ARANDELA	RONDELLA
22	SL07301	PIN	2	STIFT	PIVOT	EJE	PERNO
23	SL09962	SUPPORT	1	HALTERUNG	SUPPORT	SOPORTE	SUPPORTO
24	SL04294	SCREW	1	SCHRAUBE	VIS	TORNILLO	VITE
25	SL17395	REINFORCEMENT	1	VERSTARKUNG	RENFORT	REFUERZO	RINFORZO
26	SL14199	TERMINAL	2	ENDVERSCHLUSS	BORNE	TERMINAL	TERMINALE
27	SL04259	SCREW	1	SCHRAUBE	VIS	TORNILLO	VITE
28	SL09705	PLATE	1	PLATTE	PLAQUE	PLACA	PIASTRINA
29	SL14191-PL	SEAT BACK	1	RUCKWAND	DOSSIER	RESPALDO	SCHIENALE
30	SL14190-PL	SEAT	1	FAHRERSITZ	SIEGE	ASIENTO	SEDILE
31	SL03103	PLUG/STOPPER	4	PUFFER	TAMPON	TAPON/ALMOHADILLA	TAMPONE
33	SL05012	NUT	4	MUTTER	ECROU	TUERCA	DADO
34	SL06034	WASHER	2	SCHEIBE	RONDELLE	ARANDELA	RONDELLA
36	SL09901	LID	1	DECKEL	COUVERCLE	TAPA	COPERCHIO
37	SL04161	SCREW	1	SCHRAUBE	VIS	TORNILLO	VITE
38	SL20045	CATCH/LOCK	1	VERSCHLUSS	FERMETURE	CIERRE	CHIUSURA
39	SL04065	SCREW	4	SCHRAUBE	VIS	TORNILLO	VITE
40	SL06031	WASHER	4	SCHEIBE	RONDELLE	ARANDELA	RONDELLA
41	SL23869	FUSE	1	SICHERUNGS	FUSIBLES	FUSIBLES	FUSIBILE
42	SL23608	FUSE	1	SICHERUNGS	FUSIBLES	FUSIBLES	FUSIBILE
43	SL05041	NUT	1	MUTTER	ECROU	TUERCA	DADO
35a	SL23894-1	FUSE-HOLDERS	1	SICHERUNGSSOCKEL	PORTE-FUSIBLES	PORTAFUSIBLES	PORTAFUSIBILI
35b	SL23893-2	LID	1	DECKEL	COUVERCLE	TAPA	COPERCHIO
44a	SL23144	FUSE	4	SICHERUNGS	FUSIBLES	FUSIBLES	FUSIBILE
44b	SL23147	FUSE	1	SICHERUNGS	FUSIBLES	FUSIBLES	FUSIBILE
44c	SL23145	FUSE	1	SICHERUNGS	FUSIBLES	FUSIBLES	FUSIBILE

CODE: pl1217 ad SN from 01L156

DESCRIPTION:	TANK:ACCESSORIES	TANK:ZUBEHÖR	RESERVOIR:ACCESSOIRE	TANQUE:ACCESORIO	SERBATOIO:ACCESSORI

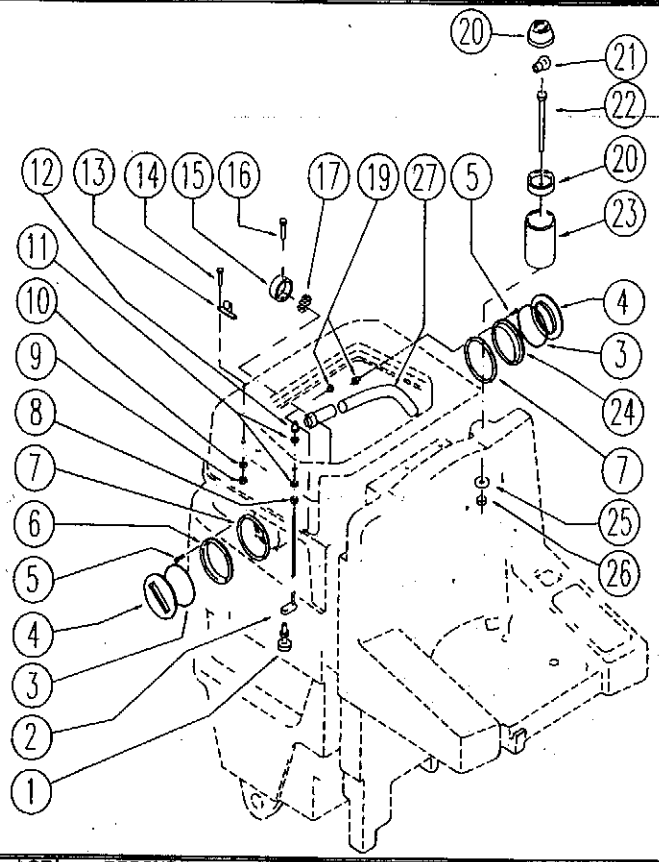

REF.	CODE	DESCRIPTION	QT	BESCHREIBUNG	DESCRIPTION	DESCRIPCION	DESCRIZIONE
1	SL23798	FLOAT	1	SCHWIMMER	FLOTTEUR	FLOTADOR	GALLEGGIANTE
2	SL09681	ROD	1	STANGE	TIGE	VARILLA	ASTA
3	SL03530	GASKET	2	DICHTUNG	JOINT	EMPAQUETADURA	GUARNIZIONE
4	SL14324	CAP	2	STOPFEN, VERSCHLUSS	BOUCHON	TAPÓN	TAPPO
5	SL04399	SCREW	8	SCHRAUBE	VIS	TORNILLO	VITE
6	SL14345	NUT	1	NUTMUTTER	FRETTE	ANILLO	GHIERA
7	SL03529	GASKET	2	DICHTUNG	JOINT	EMPAQUETADURA	GUARNIZIONE
8	SL05016	NUT	1	MUTTER	ECROU	TUERCA	DADO
9	SL05011	NUT	4	MUTTER	ECROU	TUERCA	DADO
10	SL06004	WASHER	4	SCHEIBE	RONDELLE	ARANDELA	RONDELLA
11	SL06036	WASHER	2	SCHEIBE	RONDELLE	ARANDELA	RONDELLA
12	SL05057	NUT	1	MUTTER	ECROU	TUERCA	DADO
13	SL09680	BRACKET	2	BÜGEL	ETRIER	ESTRIBO	STAFFA
14	SL04194	SCREW	4	SCHRAUBE	VIS	TORNILLO	VITE
15	SL07449	SUPPORT	1	HALTERUNG	SUPPORT	SOPORTE	SUPPORTO
16	SL04094	SCREW	1	SCHRAUBE	VIS	TORNILLO	VITE
17	SL18252	FILTER	1	FILTER	FILTRE	FILTRO	FILTRO
19	SL05055	NUT	6	MUTTER	ECROU	TUERCA	DADO
20	SL23464	FLASH-LIGHT	1	BLINKLICHT	CLIGNOTEUR	LUZ INTERMITENTE	LAMPEGGIANTE
21	SL23464-2	LAMP	1	LAMPE	LAMPE	LAMPARA	LAMPADA
22	SL04391	SCREW	1	SCHRAUBE	VIS	TORNILLO	VITE
23	SL07517	SPACER	1	DISTANZSTÜCK	ENTRETOISE	DISTANCIADOR	DISTANZIALE
24	SL14325	NUT	1	NUTMUTTER	FRETTE	ANILLO	GHIERA
25	SL09071	WASHER	1	SCHEIBE	RONDELLE	ARANDELA	RONDELLA
26	SL05041	NUT	1	MUTTER	ECROU	TUERCA	DADO
27	SL19083	HOSE	1	SCHLAUCH	TUYAU	TUBO	TUBO

CODE:						pl1070 ac SN from 00E001
DESCRIPTION:	SQUEEGEE 95		SQUEEGEE 95	SQUEEGEE 95	SQUEEGEE 95	SQUEEGEE 95

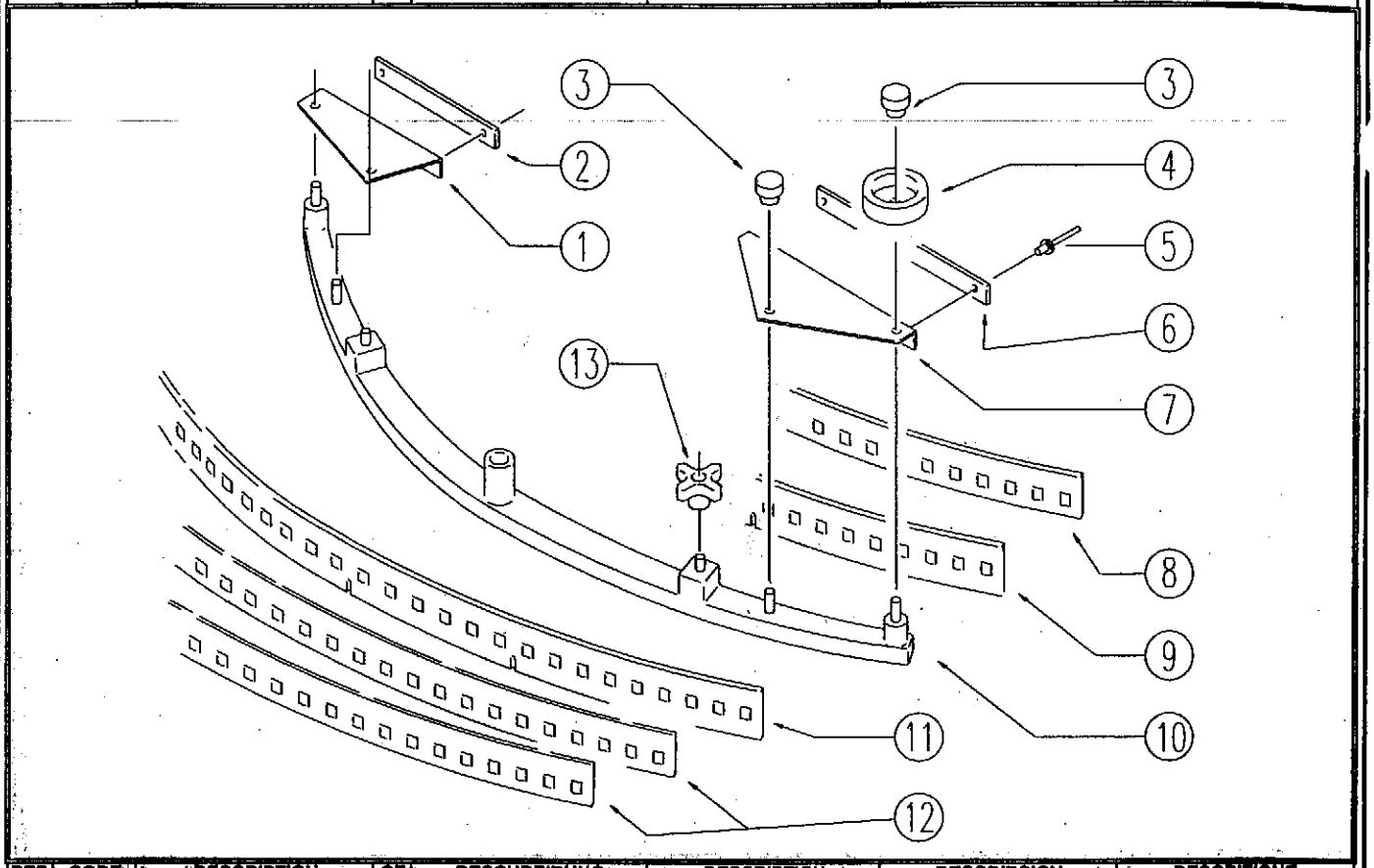

REF	CODE	DESCRIPTION	QT	BESCHREIBUNG	DESCRIPTION	DESCRIPCION	DESCRIZIONE
1	SL09733	BUMPER	1	STOSSDAMPFER	PARE-CHOCS	PARACHOQUES	PARACOLPI
2	SL03286	STRIP / BAND	1	BAND	BANDE	FAJA / CINTA	FASCIA
3	SL20018	HANDLE	4	KNAUF	POIGNEE	PERILLA	POMOLO
4	SL08016	WHEEL	2	RÄDCHEN	ROUE	RUEDA	RUOTINO
5	SL14238	TEAR RIVET	4	NIETE	RIVET	CLAVO	RIVETTO
6	SL03287	STRIP / BAND	1	BAND	BANDE	FAJA / CINTA	FASCIA
7	SL09765	BUMPER	1	STOSSDAMPFER	PARE-CHOCS	PARACHOQUES	PARACOLPI
8	SL03269	BLADE	1	GUMMILIPPE	LAME	HOJA	LAMA
9	SL03267	BLADE	1	GUMMILIPPE	LAME	HOJA	LAMA
10	SL01024	BODY	1	KÖRPER	CORPS	CUERPO	CORPO
11	SL03489	BLADE	1	GUMMILIPPE	LAME	HOJA	LAMA
12	SL03279	BLADE	2	GUMMILIPPE	LAME	HOJA	LAMA
13	SL20004	HANDLE	2	KNAUF	POIGNEE	PERILLA	VOLANTINO

CODE:					pl1069 af SN from 00G001
DESCRIPTION:	SQUEEGEE LIFT	SAUGFUßHEBEVORRICHTUNG	SOULEVEMENT SUCEUR	LEVANTA. ESCURRESUELOS	SOL. SQUEEGEE

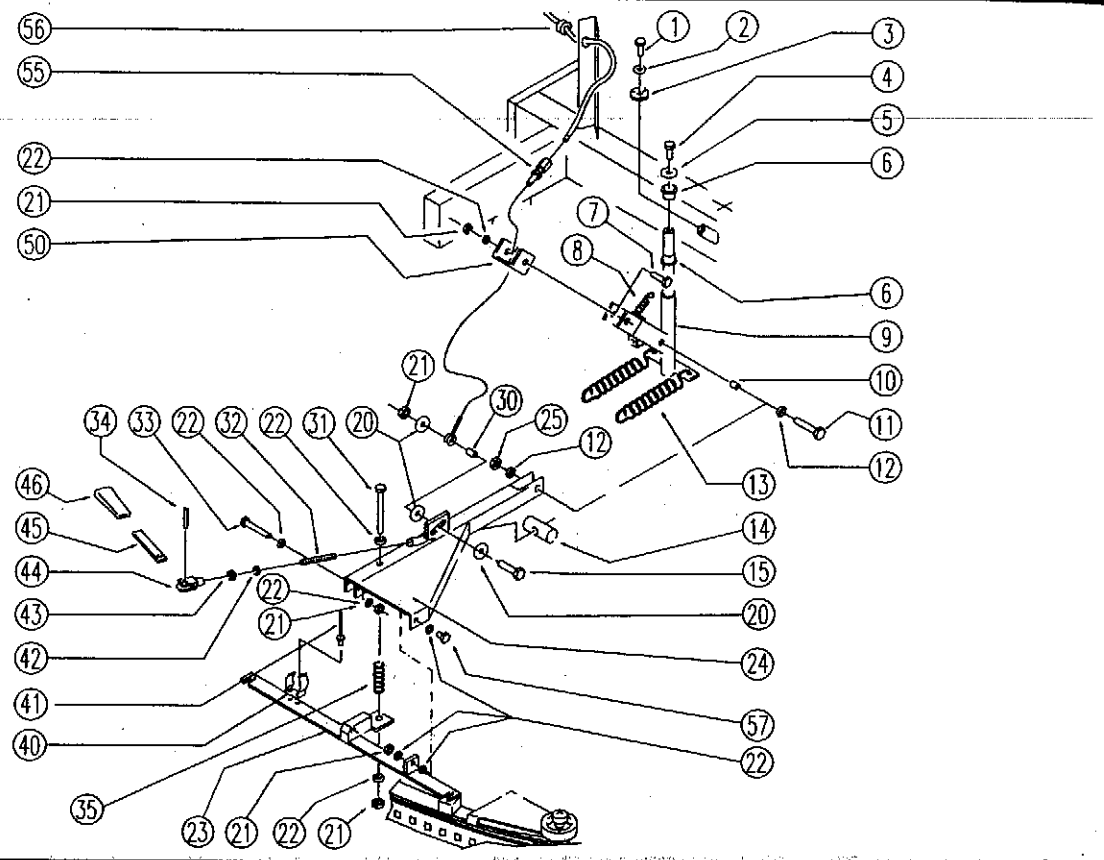

REF	CODE	DESCRIPTION	QT	BESCHREIBUNG	DESCRIPTION	DESCRIPCION	DESCRIZIONE
1	SL04180	SCREW	1	SCHRAUBE	VIS	TORNILLO	VITE
2	SL06039	WASHER	1	SCHEIBE	RONDELLE	ARANDELA	RONDELLA
3	SL06092	WASHER	1	SCHEIBE	RONDELLE	ARANDELA	RONDELLA
4	SL04010	SCREW	1	SCHRAUBE	VIS	TORNILLO	VITE
5	SL06069	WASHER	1	SCHEIBE	RONDELLE	ARANDELA	RONDELLA
6	SL12035	BEARING	2	LAGER	PALIER	COJINETE	CUSCINETTO
7	SL04004	SCREW	2	SCHRAUBE	VIS	TORNILLO	VITE
8	SL13016	SPRING	1	FEDER	RESSORT	RESORTE	MOLLA
9	SL09789	BRACKET	1	BÜGEL	ETRIER	ESTRIBO	STAFFA
10	SL12036	BEARING	2	LAGER	PALIER	COJINETE	CUSCINETTO
11	SL04312	SCREW	1	SCHRAUBE	VIS	TORNILLO	VITE
12	SL06011	WASHER	2	SCHEIBE	RONDELLE	ARANDELA	RONDELLA
13	SL13065	SPRING	2	FEDER	RESSORT	RESORTE	MOLLA
14	SL09537	HOOKING	1	AUFHÄNGUNG	ACRROCHEMENT	ANCLAJE	AGGANCIO
15	SL04127	SCREW	1	SCHRAUBE	VIS	TORNILLO	VITE
20	SL06025	WASHER	3	SCHEIBE	RONDELLE	ARANDELA	RONDELLA
21	SL05039	NUT	5	MUTTER	ECROU	TUERCA	DADO
22	SL06041	WASHER	6	SCHEIBE	RONDELLE	ARANDELA	RONDELLA
23	SL09753	BRACKET	1	BÜGEL	ETRIER	ESTRIBO	STAFFA
24	SL09657	LEVER	1	HEBEL	LEVIER	PALANCA	LEVA
25	SL06032	NUT	1	MUTTER	ECROU	TUERCA	DADO
30	SL07493	SPACER	1	DISTANZSTUCK	ENTROTOISE	ESPESOR	DISTANZIALE
31	SL04248	SCREW	1	SCHRAUBE	VIS	TORNILLO	VITE
32	SL04251	BAR	1	STAB	BARRE	BARRA	BARRA
33	SL04164	SCREW	1	SCHRAUBE	VIS	TORNILLO	VITE
34	SL11053	PIN	1	STECKER	GOUPILLE	TOMA	SPINA
35	SL13083	SPRING	1	FEDER	RESSORT	RESORTE	MOLLA
40	SL13014	CLIP	1	KLIPP	COLLIER	ABRAZADERA	CLIP
41	SL14006	TEAR RIVET	2	NIETE	RIVET	CLAVO	RIVETTO
42	SL06018	WASHER	1	SCHEIBE	RONDELLE	ARANDELA	RONDELLA
43	SL05004	NUT	1	MUTTER	ECROU	TUERCA	DADO
44	SL22001	FORK	1	GABEL	FOURCH	HORQUILLA	FORCELLA
45	SL09721	LEVER	1	HEBEL	LEVIER	PALANCA	LEVA
46	SL20021	HANDLE	1	HANDGRIFF	MANCHON	MANGHITO	IMPUGNATURA
50	SL09737	SUPPORT	1	HALTERUNG	SUPPORT	SOPORTE	SUPPORTO
55	SL14222	REGISTER	1	REGLER	REGISTRE	REGISTRO	REGISTRO
56	SL23050	FAIRLEAD	1	KABELDURCHFÜHRUNG	PASSE-CABLE	PASACABLE	PASSACAVO
57	SL04075	SCREW	1	SCHRAUBE	VIS	TORNILLO	VITE

CODE:					pl1058 aa SN from 96D673
DESCRIPTION:	BOX	BEHÄLTER	CAISSON	CAJA	CASSONE BATTERIE

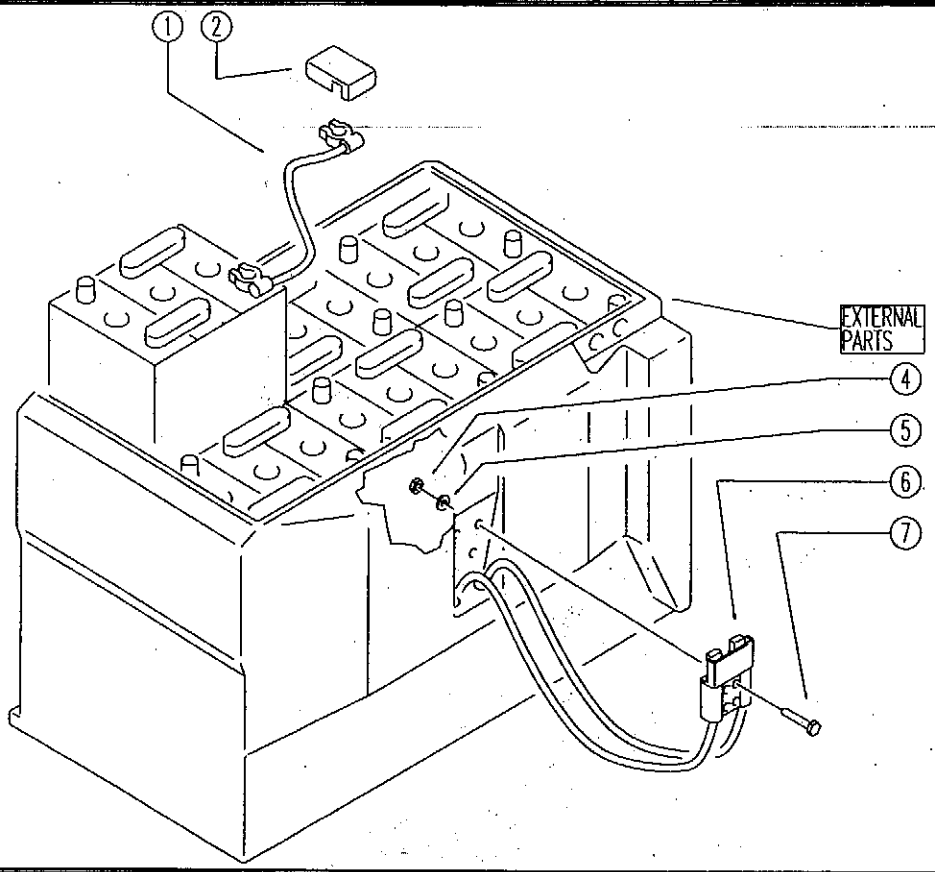

REF	CODE	DESCRIPTION	QT	BESCHREIBUNG	DESCRIPTION	DESCRIPCION	DESCRIZIONE
1	SL23640	BRIDGE / JUMPER	5	BRÜCKE	PONT	PUENTE	PONTE
2	SL23055	LID	12	DECKEL	COUVERCLE	TAPA	COPRI
4	SL05011	NUT	4	MUTTER	ECROU	TUERCA	DADO
5	SL06004	WASHER	4	SCHEIBE	RONDELLE	ARANDELA	RONDELLA
6	SL23926	WIRING	1	VERKABELUNG	CABLAGE	CABLEO	CABLAGGIO
7	SL04009	SCREW	4	SCHRAUBE	VIS	TORNILLO	VITE

CODE:					pl1033 aa SN from 98A100
DESCRIPTION:	HEAD 95:MOTOR	KOPF 95:MOTOR	TETE 95:MOTEUR	CABEZA 95:MOTOR	TESTATA 95:MOTORE

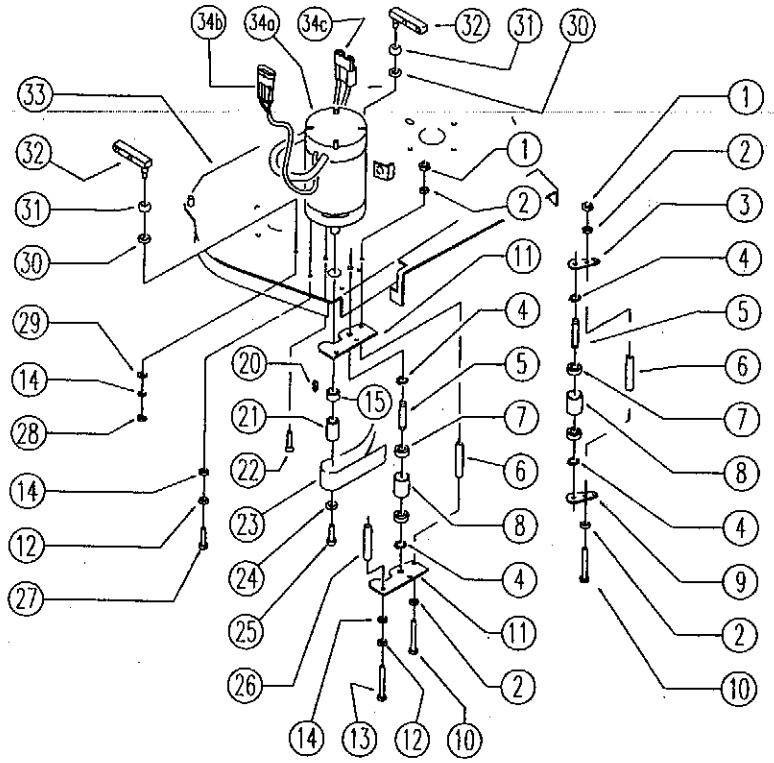

REF	CODICE	DESCRIPTION	QT	BESCHREIBUNG	DESCRIPTION	DESCRIPCION	DESCRIZIONE
1	SL05011	NUT	3	MUTTER	ECROU	TUERCA	DADO
2	SL06004	WASHER	6	SCHEIBE	RONDELLE	ARANDELA	ROSETTA
3	SL09855	PLATE	1	PLATTE	PLAQUE	PLACA	PIASTRINA
4	SL11095	RING	4	SPERRING	BAGUE	ANILLO	ANELLO
5	SL11041	PIN	2	STECKER	GOUPILLE	TOMA	SPINA
6	SL07143	SPACER	3	DISTANZSTÜCK	ENTRETOISE	ESPESOR	DISTANZIALE
7	SL12003	BEARING	4	LAGER	PALIER	COJINETE	CUSCINETTO
8	SL10045	PULLEY	2	RIEMENSCHEIBE	POULIE	POLEA	PULEGGIA
9	SL09854	PLATE	1	PLATTE	PLAQUE	PLACA	PIASTRINA
10	SL04328	SCREW	3	SCHRAUBE	VIS	TORNILLO	VITE
11	SL09622	PLATE	2	PLATTE	PLAQUE	PLACA	PIASTRINA
12	SL06002	WASHER	3	SCHEIBE	RONDELLE	ARANDELA	ROSETTA
13	SL04049	SCREW	2	SCHRAUBE	VIS	TORNILLO	VITE
14	SL06003	WASHER	5	SCHEIBE	RONDELLE	ARANDELA	ROSETTA
15	SL10068	SPACER	1	DISTANZSTÜCK	ENTRETOISE	ESPESOR	DISTANZIALE
20	SL11010	TONGUE	1	LAPPEN	LANGUETTE	LINGUETE	LINGUETTA
21	SL07222	PULLEY	1	RIEMENSCHEIBE	POULIE	POLEA	PULEGGIA
22	SL04283	SCREW	1	SCHRAUBE	VIS	TORNILLO	VITE
23	SL16020	BELT	1	RIEMEN	COURROIE	CORREA	CINGHIA
24	SL07166	WASHER	1	SCHEIBE	RONDELLE	ARANDELA	ROSETTA
25	SL04096	SCREW	1	SCHRAUBE	VIS	TORNILLO	VITE
26	SL07234	SPACER	2	DISTANZSTÜCK	ENTRETOISE	ESPESOR	DISTANZIALE
27	SL04083	SCREW	1	SCHRAUBE	VIS	TORNILLO	VITE
28	SL05001	NUT	2	MUTTER	ECROU	TUERCA	DADO
29	SL06064	WASHER	2	SCHEIBE	RONDELLE	ARANDELA	ROSETTA
30	SL06062	WASHER	2	SCHEIBE	RONDELLE	ARANDELA	ROSETTA
31	SL03209	RUBBER	2	GUMMILAGER	BOUCHON CAOUTCHOUC	TAPON GOMA	GOMMINO
32	SL09629	BRACKET	2	BÜGEL	ETRIER	ESTRIBO	STAFFA
33	SL09884	PLATE	1	PLATTE	PLAQUE	PLACA	PIASTRA
34a	SL02113	MOTOR	1	MOTOR	MOTEUR	MOTOR	MOTORE
34b	SL23527	CONNECTOR	1	VERBINDER	CONNECTEUR	CONECTADOR	CONNETTORE
34c	SL23010	CONNECTOR	1	VERBINDER	CONNECTEUR	CONECTADOR	CONNETTORE
34d	SL02113-1	MOTOR COAL	2	BÜRSTENMOTOR KOHL	CHARBON MOTOEUR	CARBONES MOTORES	CARBONI

CODE:					pl1381 ab SN from 00A101
DESCRIPTION:	HEAD 95 FLAP and BOX	KOPF	TETE	CABEZA	TEST. 95: FLAP E CASSETTO

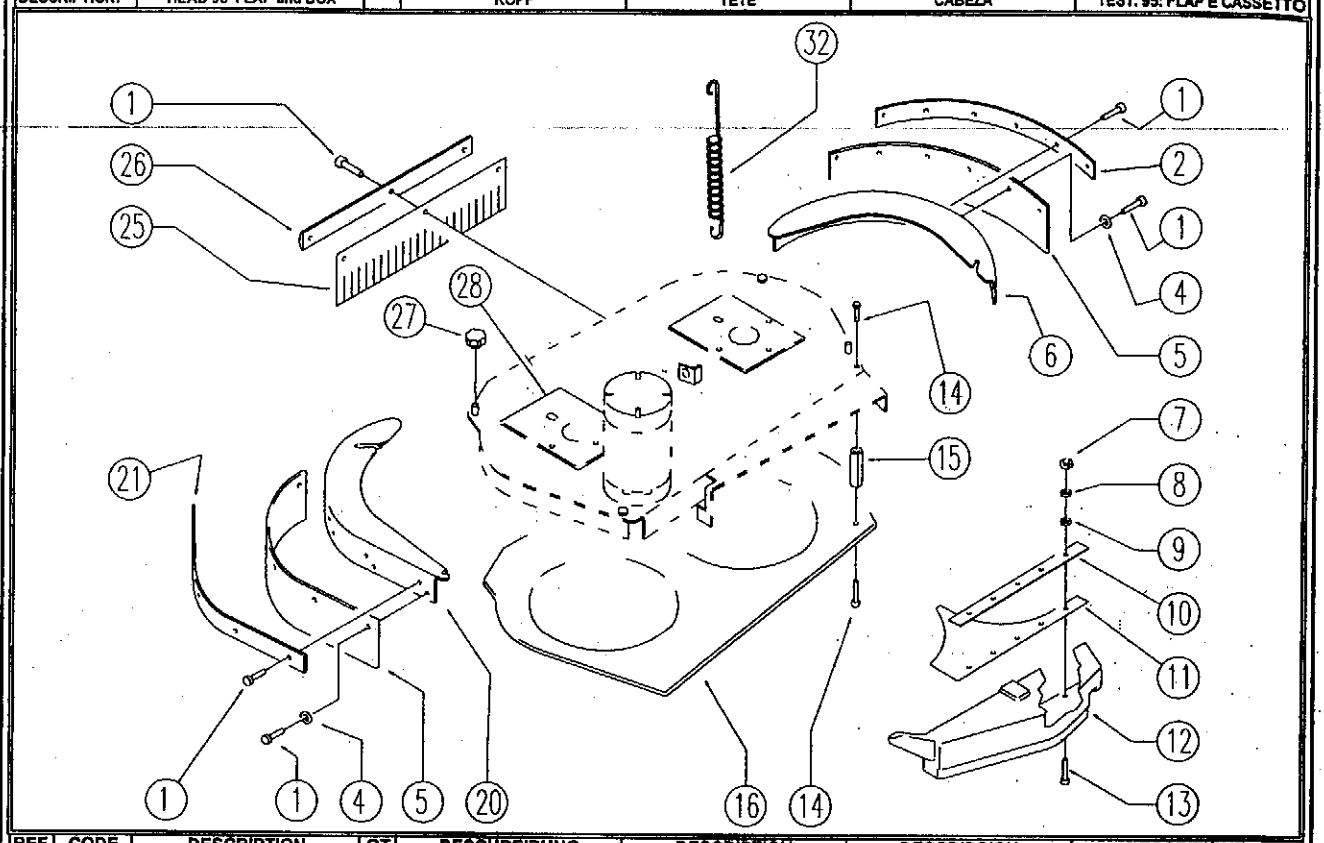

REF	CODE	DESCRIPTION	QT	BESCHREIBUNG	DESCRIPTION	DESCRIPCION	DESCRIZIONE
1	SL04065	SCREW	23	SCHRAUBE	VIS	TORNILLO	VITE
2	SL03423	FLAP PRESS	1	FLAPNIEDERHALTER	APUIE FLAP	APRETA FLAP	PREMI
4	SL06031	WASHER	10	SCHEIBE	RONDELLE	ARANDELA	ROSETTA
5	SL03422	FLAP	2	FLAP	FLAP	FLAP	FLAP
6	SL09683	COVER	1	ABDECKUNG	COUVERCLE	TAPA	COPERTURA
7	SL05044	NUT	5	MUTTER	ECROU	TUERCA	DADO
8	SL06033	WASHER	5	SCHEIBE	RONDELLE	ARANDELA	ROSETTA
9	SL06032	WASHER	5	SCHEIBE	RONDELLE	ARANDELA	ROSETTA
10	SL21133	LAMINATION	1	FEINBLECH	TOLE MINCE	CHAPA FINA	LAMIERINO
11	SL17375	DUSTPAN	1	MÜLLSCHAUFEL	PELLE A ORDURE	PALETA BASURA	PALETTA
12	SL17330	CASE	1	MÜLLKASTEN	TIROIR	CAJON BASURA	CASSETTO
13	SL04364	SCREW	5	SCHRAUBE	VIS	TORNILLO	VITE
14	SL04006	SCREW	14	SCHRAUBE	VIS	TORNILLO	VITE
15	SL14205	SPACER	7	DISTANZSTÜCK	ENTRETOISE	ESPEBOR	DISTANZIALE
16	SL03425	GUARD	1	SCHUTZ	PROTECTION	PROTECCION	PROTEZIONE
20	SL09682	COVER	1	ABDECKUNG	COUVERCLE	TAPA	COPERTURA
21	SL03421	FLAP PRESS	1	FLAPNIEDERHALTER	APUIE FLAP	APRETA FLAP	PREMI
25	SL03424	FLAP	1	FLAP	FLAP	FLAP	FLAP
26	SL03426	FLAP PRESS	1	FLAPNIEDERHALTER	APUIE FLAP	APRETA FLAP	PREMI
27	MP06100	HANDLE	2	KNAUF	POIGNEE	PERILLA	POMOLO
28	SL03291	GASKET	2	DICHTUNG	JOINT	EMPAQUETADURA	GUARNIZIONE
32	SL13064	SPRING	1	FEDER	RESSORT	RESORTE	MOLLA

CODE:

pl1034 aa SN from 98A100

DESCRIPTION:	HEAD 95	KOPF 95	TETE 95	CABEZA 95	TESTATA 95:SPAZZOLA

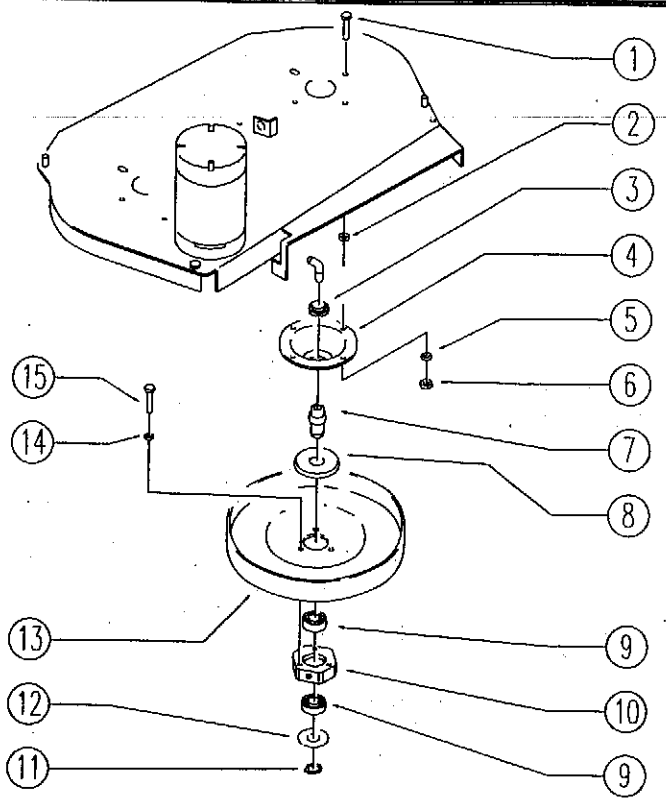

REF	CODE	DESCRIPTION	QT	BESCHREIBUNG	DESCRIPTION	DESCRIPCION	DESCRIZIONE
1	SL04271	SCREW	8	SCHRAUBE	VIS	TORNILLO	VITE
2	SL06011	WASHER	8	SCHEIBE	RONDELLE	ARANDELA	RONDELLA
3	SL05049	NUT	2	ZWINGE	ANNEUAU DE FIXATION	ANILLO	GHIERA
4	SL15023	FLANGE	2	FLANSCH	BRIDE	ESTRIBO	FLANGIA
5	SL06003	WASHER	8	SCHEIBE	RONDELLE	ARANDELA	ROSETTA
6	SL05001	NUT	8	MUTTER	ECROU	TUERCA	DADO
7	SL07278	PIN	2	STIFT	PIVOT	EJE	PERNO
8	SL03259	GUARD	2	SCHUTZ	PROTECTION	PROTECCION	PROTEZIONE
9	SL12025	BEARING	4	LAGER	PALIER	COJINETE	CUSCINETTO
10	SL14204	HEXAGON	2	SECHSKANT	HEXAGONE	HEXAGONO	ESAGONO
11	SL11096	RING	2	SPERRING	BAGUE	ANILLO	ANELLO
12	SL03247	GUARD	2	SCHUTZ	PROTECTION	PROTECCION	PROTEZIONE
13	SL10053	PULLEY	2	RIEMENSCHEIBE	POULIE	POLEA	PULEGGIA
14	SL06004	WASHER	6	SCHEIBE	RONDELLE	ARANDELA	ROSETTA
15	SL04119	SCREW	6	SCHRAUBE	VIS	TORNILLO	VITE

CODE:					pl1048 aa SN from 96D673
DESCRIPTION:	FRONT HEAD LIFT	KOPFHEBEVORRICHTUNG	SOULEVEMENT TETE	LEVANTAMIENTO CABEZA	SOLLANTERIORE TESTATA

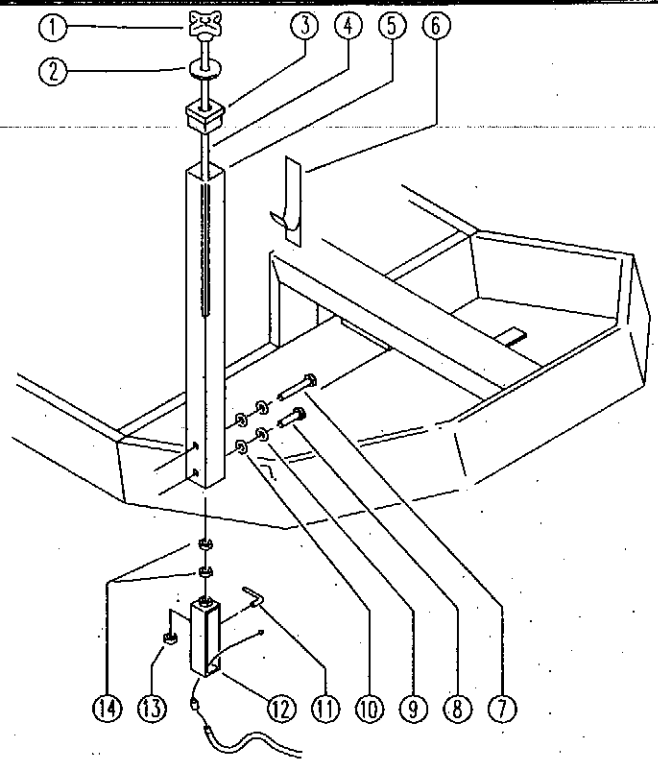

REF	CODE	DESCRIPTION	QT	BESCHREIBUNG	DESCRIPTION	DESCRIPCION	DESCRIZIONE
1	SL20004	HANDLE	1	KNAUF	POIGNEE	PERILLA	VOLANTINO
2	SL06061	WASHER	1	SCHEIBE	RONDELLE	ARANDELA	ROSETTA
3	SL14306	CAP	1	STOPPEN, VERSCHLUSS	BOUCHON	TAPON	TAPPO
4	SL04287	BAR	1	STAB	BARRE	BARRA	BARRA
5	SL09746	STRUCTURAL	1	PROFIL	PROFILE	PERFIL	PROFILATO
6	SL25903	ADESIVE LABEL	1	AUFKLEBER	ADHESIF	ETIQUETA ADHESIVA	ADESIVO
7	SL04019	SCREW	1	SCHRAUBE	VIS	TORNILLO	VITE
8	SL04023	SCREW	1	SCHRAUBE	VIS	TORNILLO	VITE
9	SL06002	WASHER	2	SCHEIBE	RONDELLE	ARANDELA	ROND.
10	SL06003	WASHER	2	SCHEIBE	RONDELLE	ARANDELA	RONDELLA
11	SL07316	INDICATOR	1	ANZEIGER	INDICATEUR	INDICADOR	INDICATORE
12	SL09747	PLATE	1	PLATTE	PLAQUE	PLACA	PIASTRA
13	SL05001	NUT	1	MUTTER	ECROU	TUERCA	DADO
14	SL05004	NUT	2	MUTTER	ECROU	TUERCA	DADO

CODE:						pl1047 ac SN from 97F758
DESCRIPTION:	REAR HEAD LIFT		KOPFHEBEVORRICHTUNG	SOULEVEMENT TETE	LEVANTAMIENTO CABEZA	SOLL. POSTERIORE TESTATA

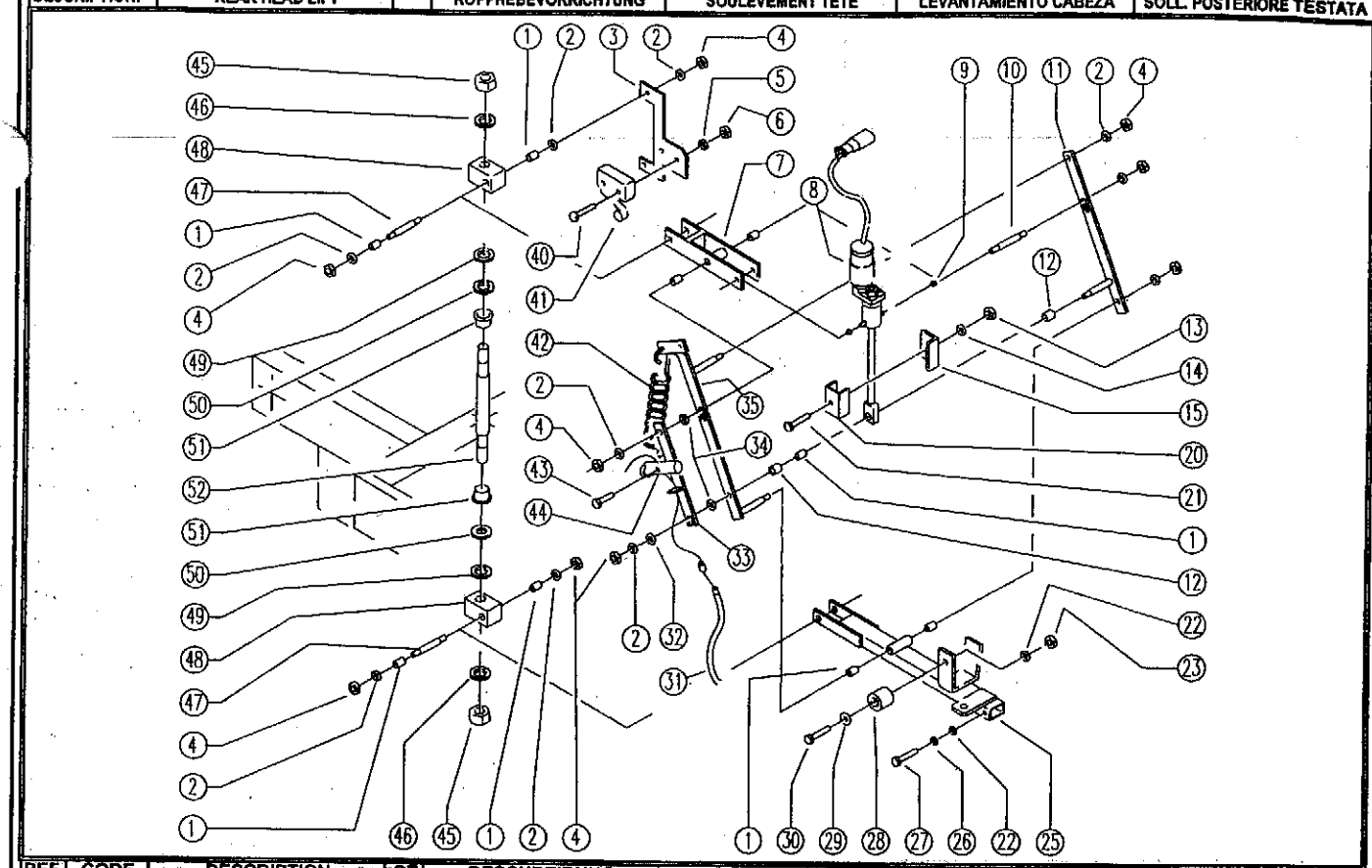

REF	CODE	DESCRIPTION	QT	BESCHREIBUNG	DESCRIPTION	DESCRIPCION	DESCRIZIONE
1	SL12036	BEARING	9	LAGER	PALIER	COJINETE	CUSCINETTO
2	SL06003	WASHER	10	SCHEIBE	RONDELLE	ARANDELA	ROSETTA
3	SL09652	SUPPORT	1	HALTERUNG	SUPPORT	SOPORTE	SUPPORTO
4	SL05039	NUT	10	MUTTER	ECROU	TUERCA	DADO
5	SL06019	WASHER	2	SCHEIBE	RONDELLE	ARANDELA	ROSETTA
6	SL05034	NUT	2	MUTTER	ECROU	TUERCA	DADO
7	SL09520	LEVER	1	HEBEL	LEVIER	PALANCA	LEVA
8	SL02111-1	ACTUATOR	1	TRIEB	ACTIONNEUR	ACCIONADOR	ATTUATORE
9	SL12040	BEARING	2	LAGER	PALIER	COJINETE	CUSCINETTO
10	SL07312	PIN	1	STIFT	PIVOT	EJE	PERNO
11	SL09736	LEVER	1	HEBEL	LEVIER	PALANCA	LEVA
12	SL07297	SPACER	2	DISTANZSTÜCK	ENTRETOISE	ESPESOR	DISTANZ.ATTUATORE
13	SL05007	NUT	1	MUTTER	ECROU	TUERCA	DADO
14	SL06016	WASHER	1	SCHEIBE	RONDELLE	ARANDELA	ROSETTA
15	SL09734	SUPPORT	1	HALTERUNG	SUPPORT	SOPORTE	SUPP.
20	SL09743	SPACER	1	DISTANZSTÜCK	ENTRETOISE	ESPESOR	DISTANZIALE
21	SL04013	SCREW	1	SCHRAUBE	VIS	TORNILLO	VITE
22	SL06004	WASHER	3	SCHEIBE	RONDELLE	ARANDELA	ROSETTA
23	SL05058	NUT	1	MUTTER	ECROU	TUERCA	DADO
25	SL09519	LEVER	1	HEBEL	LEVIER	PALANCA	LEVA
26	SL06001	WASHER	2	SCHEIBE	RONDELLE	ARANDELA	ROSETTA
27	SL04048	SCREW	2	SCHRAUBE	VIS	TORNILLO	VITE
28	SL03103	CAP	1	STOPFEN, VERSCHLUSS	BOUCHON	TAPON	TAPPO
29	SL06039	WASHER	1	SCHEIBE	RONDELLE	ARANDELA	ROSETTA
30	SL04073	SCREW	1	SCHRAUBE	VIS	TORNILLO	VITE
31	SL14225	CABLE	1	KABEL	CABLE	CABLE	CAVO
32	SL06064	WASHER	1	SCHEIBE	RONDELLE	ARANDELA	ROSETTA
33	SL09749	PLATE	1	PLATTE	PLAQUE	PLACA	PIASTRINA
34	SL06062	WASHER	2	SCHEIBE	RONDELLE	ARANDELA	ROSETTA
35	SL09735	PLATE	1	PLATTE	PLAQUE	PLACA	PIATTO
40	SL04107	SCREW	2	SCHRAUBE	VIS	TORNILLO	VITE
41	SL23200	MICROSWITCH	1	MIKROSCHALTER	MICRO-INTERRUPTEUR	MICROINTERRUPTOR	MICROINTERRUTTORE
42	SL13078	SPRING	2	FEDER	RESSORT	RESORTE	MOLLA
43	SL04180	SCREW	1	SCHRAUBE	VIS	TORNILLO	VITE
44	SL07314	PIN	1	STIFT	PIVOT	EJE	PERNO
45	SL05037	NUT	2	MUTTER	ECROU	TUERCA	DADO
46	SL06029	WASHER	2	SCHEIBE	RONDELLE	ARANDELA	ROSETTA
47	SL07272	PIN	2	STIFT	PIVOT	EJE	PERNO
48	SL07274	BLOCK / LOCK	2	SPERRE	BLOCAGE / VERROUILLAGE	BLOQUE / BLOQUEO	BLOCCO
49	SL06027	WASHER	2	SCHEIBE	RONDELLE	ARANDELA	ROSETTA
50	SL06074	WASHER	2	SCHEIBE	RONDELLE	ARANDELA	ROSETTA
51	SL12037	BUSHING	2	BUCHSE	DOUILLE	BULLON	BOCCOLA
52	SL07273	PIN	1	STIFT	PIVOT	EJE	PERNO

CODE:					pl1215 aa SN from 96D673
DESCRIPTION:	HEAD FASTENER	KOPFHALTER	BUTEE TETE	RETÉN CABEZA	FERMA TESTATA

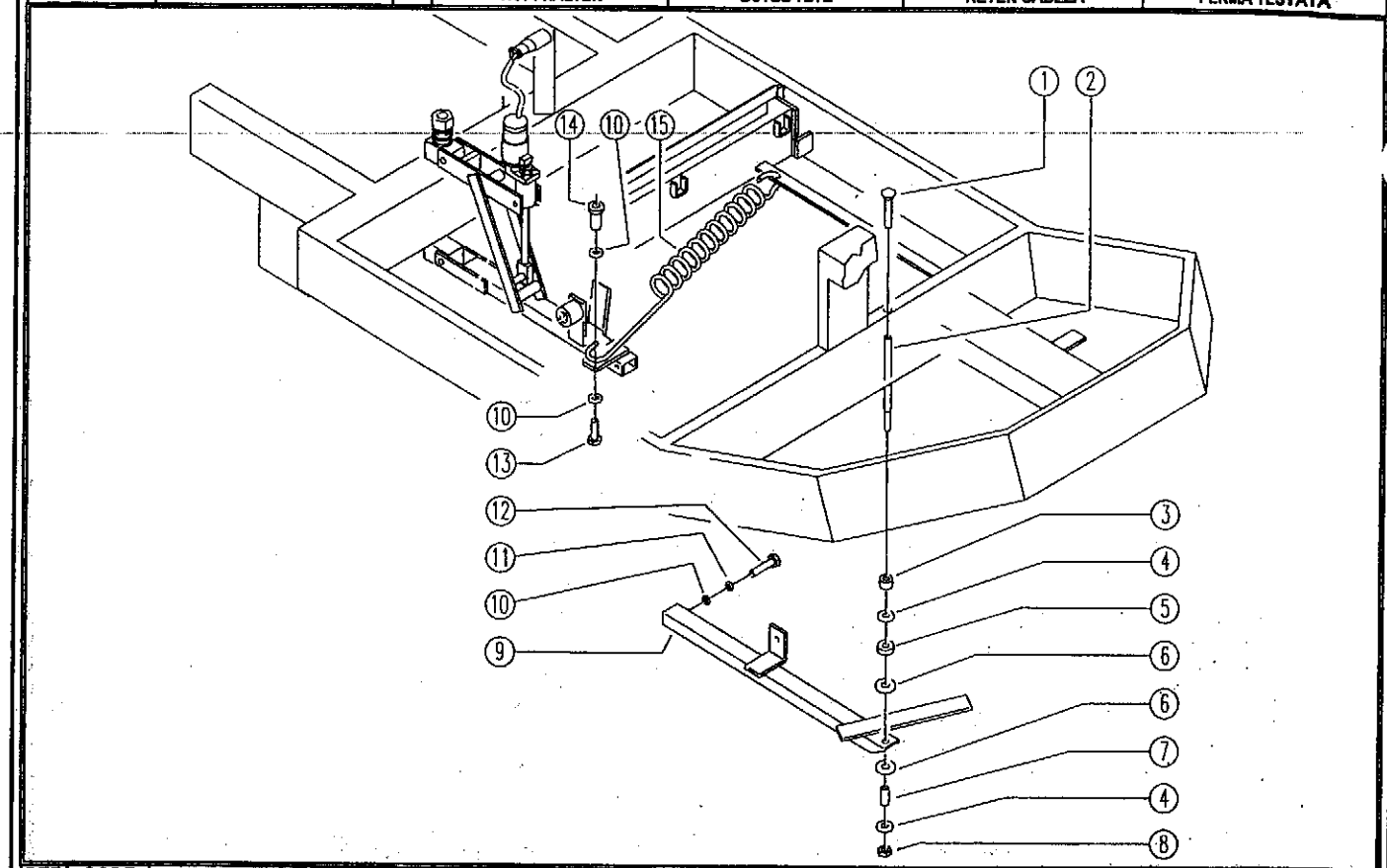

REF	CODE	DESCRIPTION	QT	BESCHREIBUNG	DESCRIPTION	DESCRIPCION	DESCRIZIONE
1	SL04101	SCREW	1	SCHRAUBE	VIS	TORNILLO	VITE
2	SL07276	PIN	1	STIFT	PIVOT	EJE	PERNO
3	SL07340	SPACER	1	DISTANZSTÜCK	ENTRETOISE	ESPESOR	DISTANZIALE
4	SL06017	WASHER	2	SCHEIBE	RONDELLE	ARANDELA	RONDELLA
5	SL03209	RUBBER	1	GUMMILAGER	BOUCHON CAOUTCHOUC	TAPON GOMA	GOMMINO
6	SL06062	WASHER	2	SCHEIBE	RONDELLE	ARANDELA	RONDELLA
7	SL07232	SPACER	1	DISTANZSTÜCK	ENTRETOISE	ESPESOR	DISTANZIALE
8	SL05039	NUT	1	MUTTER	ECROU	TUERCA	DADO
9	SL09517	LEVER	1	HEBEL	LEVIER	PALANCA	LEVA
10	SL06004	WASHER	4	SCHEIBE	RONDELLE	ARANDELA	RONDELLA
11	SL06001	WASHER	2	SCHEIBE	RONDELLE	ARANDELA	RONDELLA
12	SL04048	SCREW	2	SCHRAUBE	VIS	TORNILLO	VITE
13	SL04073	SCREW	1	SCHRAUBE	VIS	TORNILLO	VITE
14	SL07054	BUSHING/BUSH	1	BUCHSE	DOUILLE	CASQUILLO/FORRO	BOCCOLA
15	SL13064	SPRING	1	FEDER	RESSORT	RESORTE	MOLLA

CODE:					pl1060BC ad SN from 01G710
DESCRIPTION:	ELECTRIC UNIT 1	ELEKTRISCHE GRUPPE 1	GROUPE ELECTRIQUE 1	GRUPO ELÉCTRICO 1	PARTI ELETTRICHE 1

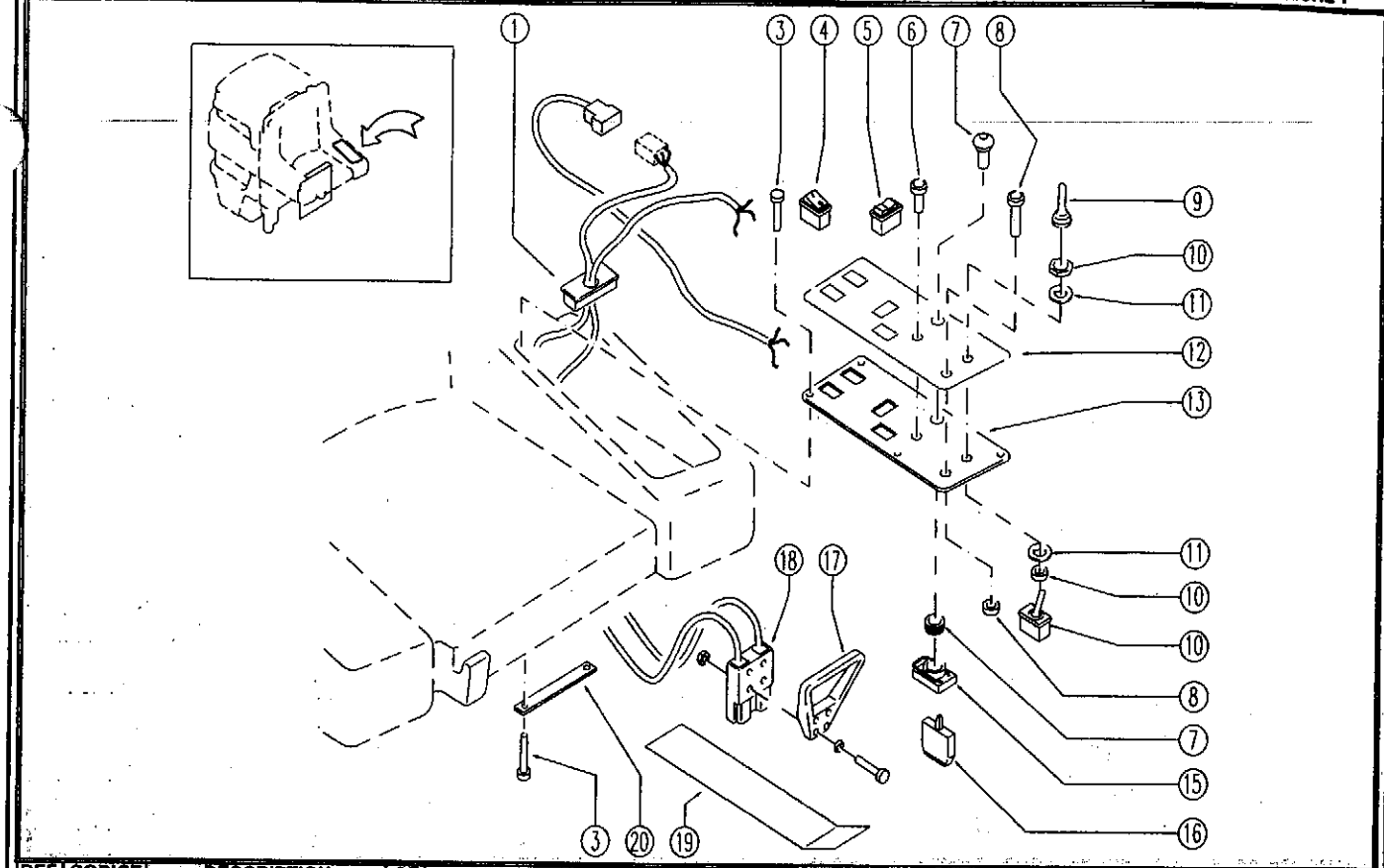

REF	CODICE	DESCRIPTION	QT	BESCHREIBUNG	DESCRIPTION	DESCRIPCION	DESCRIZIONE
1	SL14230	TERMINAL	1	ENDVERSCHLUSS	BORNE	TERMINAL	TERMINALE
3	SL04173	SCREW	12	SCHRAUBE	VIS	TORNILLO	VITE
4	SL23183	SWITCH	2	SCHALTER	INTERRUPTEUR	INTERRUPTOR	INTERRUTTORE
5	SL23649	COMMUTATOR	2	UMSCHALTER	COMMUTATEUR	CONMUTADOR	COMMUTATORE
6	SL23024	PILOT LIGHT	1	KONTROLLAMPE	AVERTISSEUR	LUZ INDICADORA	SPIA
7	SL23669	OPERATOR	1	BEDIENER, FAHRER	OPERATEUR	OPERADOR	OPERATORE
8	SL23461-1	PUSH-BUTTON	1	DRUCKKNOPF, TASTE	BOUTON-POUSSOIR	PULSADOR	PULSANTE
8	SL23462-2	REFLEX REFLECTOR	1	RÜCKSTRAHLER	PASTILLE REFLECHISSANTE	CATAFARO	GEMMA
8	SL23461-3	REFLEX REFLECTOR	1	RÜCKSTRAHLER	PASTILLE REFLECHISSANTE	CATAFARO	SPECOLA
9	SL53016	CAP	1	KAPPE	CAPUCHON	CAPUCHON	CAPPUCCIO
10	SL53015	SWITCH / SHUNTER	1	ABWEISER	DEVIATEUR	DESVIADOR	DEVIATORE
11	SL06111	WASHER	2	SCHEIBE	RONDELLE	ARANDELA	RONDELLA
12	SL25784	ADESIVE LABEL	1	AUFKLEBER	ADHESIF	ETIQUETA ADHESIVA	ADESIVO
13	SL09952	PLATE	1	PLATTE	PLAQUE	PLACA	PIASTRA
15	SL23955	CONTACT CARRIER	1	KONTAKTEHALTER	PORTE-CONTACTS	PORTACONTACTOS	PORTA CONTATTI
16	SL23956	BLOCK / LOCK	2	SPERRE	BLOCAGE / VERROUILLAGE	BLOQUE / BLOQUEO	BLOCCO
17	SL09294	HANDLE	1	HANDGRIFF	POIGNEE	PERILLA	MANIGLIA
18	SL23459	CONNECTOR	1	VERBINDER	CONNECTEUR	CONECTADOR	PRESA
19	SL09917	PLATE	1	PLATTE	PLAQUE	PLACA	PIASTRA
20	SL09526	SUPPORT	3	HALTERUNG	SUPPORT	SOPORTE	SOSTEGNO

CODE:					pl1061 ad SN from 011179
DESCRIPTION:	ELECTRIC UNIT 2	ELEKTRISCHE GRUPPE 2	GROUPE ELECTRIQUE 2	GRUPO ELÉCTRICO 2	PARTI ELETTRICHE 2

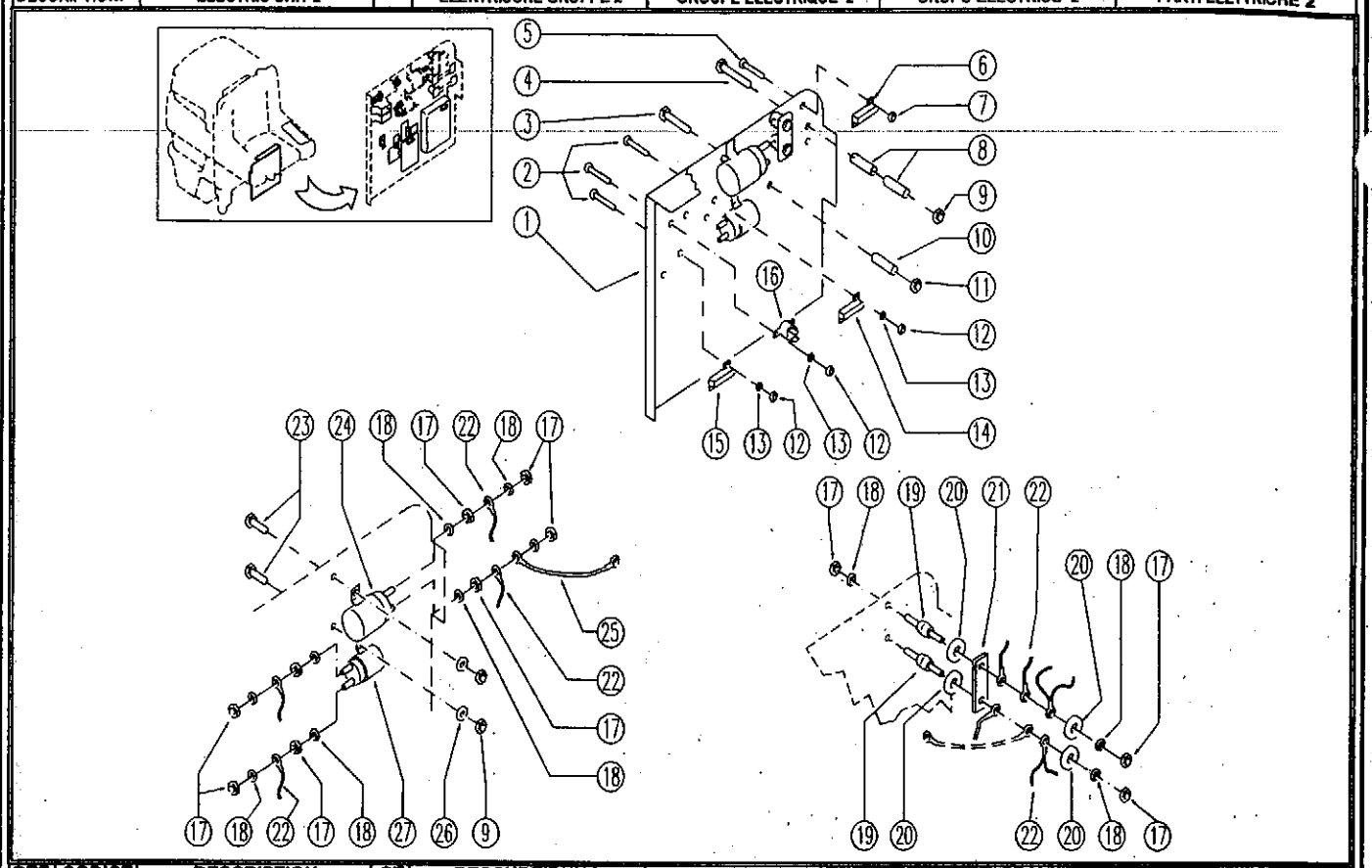

REF	CODICE	DESCRIPTION	QT	BESCHREIBUNG	DESCRIPTION	DESCRIPCION	DESCRIZIONE
1	SL09682	PLATE	1	PLATTE	PLAQUE	PLACA	PIASTRA
2	SL04179	SCREW	6	SCHRAUBE	VIS	TORNILLO	VITE
3	SL04047	SCREW	1	SCHRAUBE	VIS	TORNILLO	VITE
4	SL04196	SCREW	2	SCHRAUBE	VIS	TORNILLO	VITE
5	SL04066	SCREW	2	SCHRAUBE	VIS	TORNILLO	VITE
6	SL23934	RESISTANCE	1	WIDERSTAND	RESISTANCE	RESISTENCIA	RESISTENZA
7	SL05031	NUT	2	MUTTER	ECROU	TUERCA	DADO
8	SL07178	SPACER	4	DISTANZSTÜCK	ENTRETOISE	ESPESOR	DISTANZIALE
9	SL05058	NUT	6	MUTTER	ECROU	TUERCA	DADO
11	SL07337	SPACER	1	DISTANZSTÜCK	ENTRETOISE	ESPESOR	DISTANZIALE
11	SL05039	NUT	1	MUTTER	ECROU	TUERCA	DADO
12	SL05019	NUT	8	MUTTER	ECROU	TUERCA	DADO
13	SL06009	WASHER	6	SCHEIBE	RONDELLE	ARANDELA	ROSETTA
14	SL23969	RESISTANCE	1	WIDERSTAND	RESISTANCE	RESISTENCIA	RESISTENZA
15	SL23957	RESISTANCE	1	WIDERSTAND	RESISTANCE	RESISTENCIA	RESISTENZA
16	SL23961	THERMOSTAT	2	THERMOSTAT	THERMOSTAT	TERMOSTATO	TERMOSTATO
17	SL05004	NUT	12	MUTTER	ECROU	TUERCA	DADO
18	SL06002	WASHER	12	SCHEIBE	RONDELLE	ARANDELA	ROSETTA
19	SL23103	INSULATOR	2	ISOLIERER	ISOLATEUR	AISLADOR	SUPPORTO
20	SL06025	WASHER	4	SCHEIBE	RONDELLE	ARANDELA	ROSETTA
21	SL23569	BRIDGE / JUMPER	1	BRÜCKE	PONT	PUENTE	PONTE
22	GR23479-3	WIRING UNIT	1	VERKABELUNG	GROUPE CABLAGE	GRUPO CABLEO	GRUPPO
23	SL04010	SCREW	4	SCHRAUBE	VIS	TORNILLO	VITE
24	SL23371	TELESWITCH	1	FERNSCHALTER	TELE-INTERRUPTEUR	TELEINTERUPTOR	TELERUTTORE
25	SL23125	SHUNT	1	SHUNT	SHUNT	SHUNT	SHUNT
26	SL06004	WASHER	4	SCHEIBE	RONDELLE	ARANDELA	ROSETTA
27	SL23034	TELESWITCH	1	FERNSCHALTER	TELE-INTERRUPTEUR	TELEINTERUPTOR	TELERUTTORE

CODE:					pl1062 ad SN from 01I179
DESCRIPTION:	ELECTRIC UNIT 3	ELEKTRISCHE GRUPPE 3	GROUPE ELECTRIQUE 3	GRUPO ELÉCTRICO 3	ELECTRIC UNIT 3

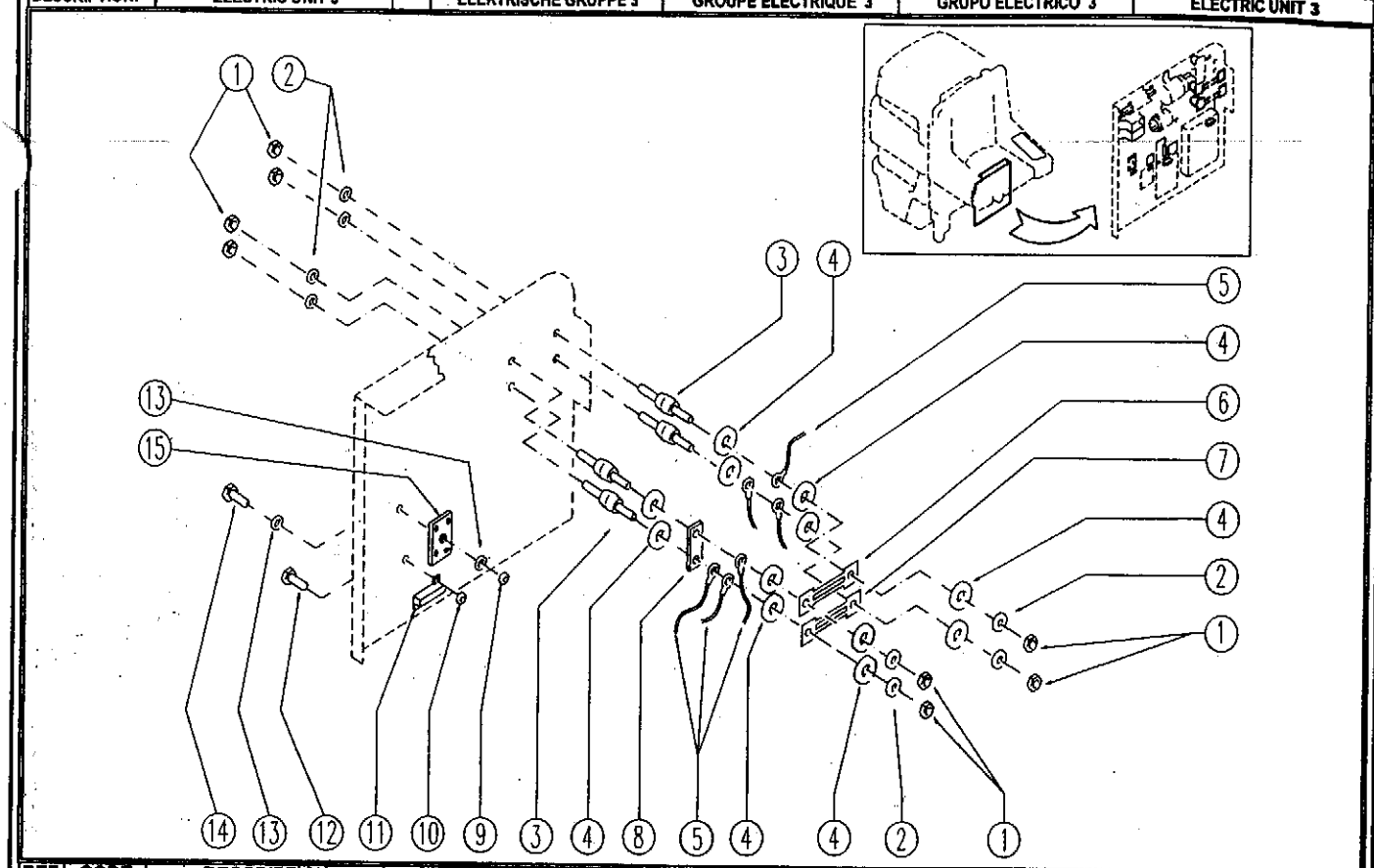

REF	CODE	DESCRIPTION	QT	BESCHREIBUNG	DESCRIPTION	DESCRIPCION	DESCRIZIONE
1	SL05004	NUT	8	MUTTER	ECROU	TUERCA	DADO
2	SL06002	WASHER	8	SCHEIBE	RONDELLE	ARANDELA	RONDELLA
3	SL23103	INSULATOR	4	ISOLIERER	ISOLATEUR	AISLADOR	SUPPORTO
4	SL06025	WASHER	12	SCHEIBE	RONDELLE	ARANDELA	ROSETTA
5	GR23479-3	WIRING	1	VERKABELUNG	CABLAGE	CABLEO	CABLAGGIO PRINCIPALE
6	SL23606	FUSE	1	SICHERUNGS	FUSIBLES	FUSIBLES	FUSIBILE
7	SL23660	FUSE	1	SICHERUNGS	FUSIBLES	FUSIBLES	FUSIBILE
8	SL23569	BRIDGE / JUMPER	1	BRÜCKE	PONT	PUENTE	PONTE
9	SL05034	NUT	1	MUTTER	ECROU	TUERCA	DADO
10	SL05031	NUT	2	MUTTER	ECROU	TUERCA	DADO
11	SL53021	RESISTANCE	1	WIDERSTAND	RESISTANCE	RESISTENCIA	RESISTENZA
12	SL04066	SCREW	2	SCHRAUBE	VIS	TORNILLO	VITE
13	SL06019	WASHER	2	SCHEIBE	RONDELLE	ARANDELA	RONDELLA
14	SL04066	SCREW	1	SCHRAUBE	VIS	TORNILLO	VITE
15	SL23061	BRIDGE / JUMPER	1	BRÜCKE	PONT	PUENTE	PONTE

CODE:	pl1063 ad SN from 02A550

DESCRIPTION:	ELECTRIC UNIT 4	ELEKTRISCHE GRUPPE 4	GROUPE ELECTRIQUE 4	GRUPO ELÉCTRICO 4	PARTI ELETTRICHE 4

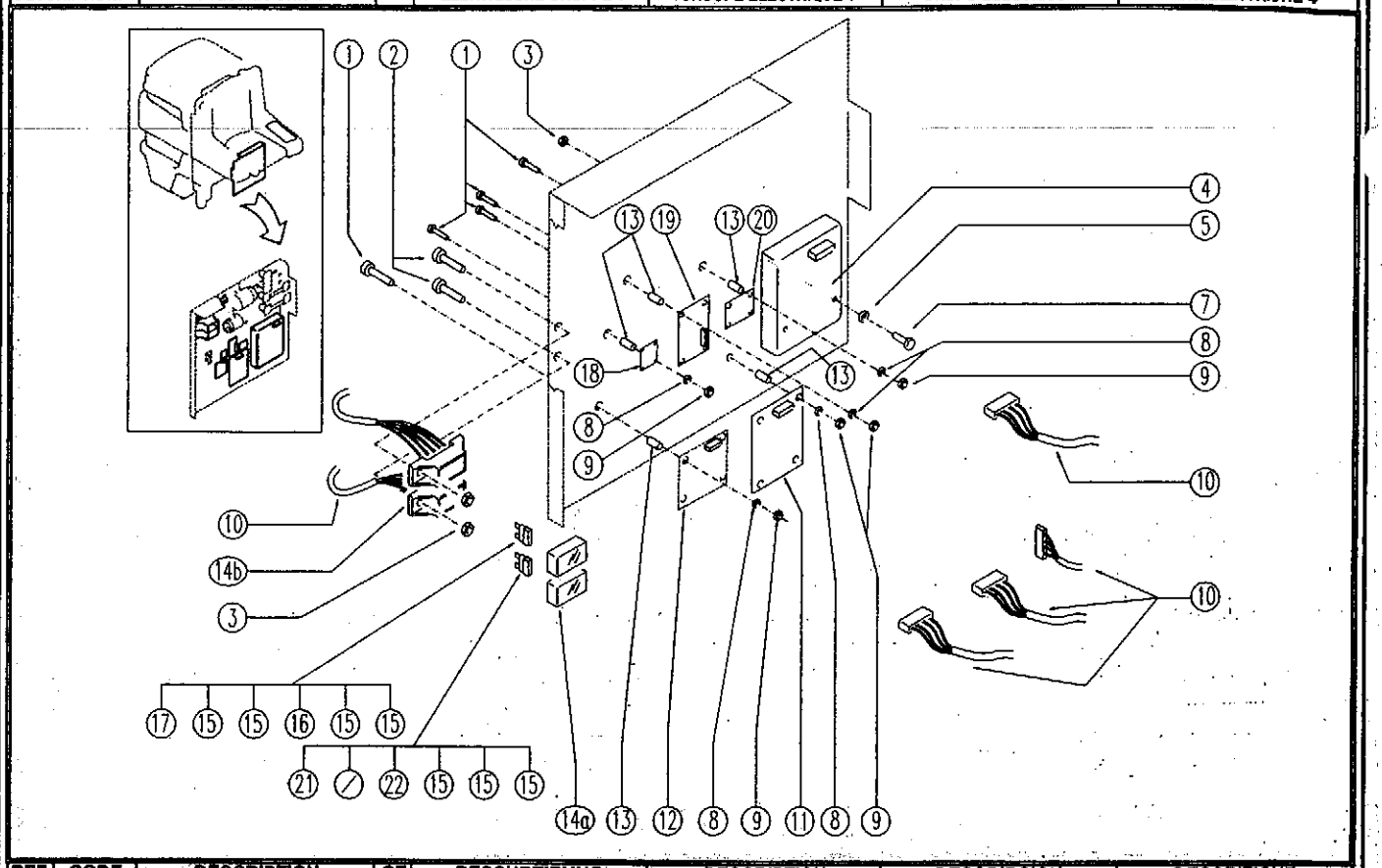

REF	CODE	DESCRIPTION	QT	BESCHREIBUNG	DESCRIPTION	DESCRIPCION	DESCRIZIONE
1	SL04016	SCREW	17	SCHRAUBE	VIS	TORNILLO	VITE
2	SL04106	SCREW	4	SCHRAUBE	VIS	TORNILLO	VITE
3	SL05034	NUT	6	MUTTER	ECROU	TUERCA	DADO
4	SL53017	DRIVE GEARCASE / BOARD	1	ZENTRALE / KARTE	FICHE DE CONTROLE	CENTRALITA / TARJETA	SCHEDA TRAZIONE
5	SL06038	WASHER	2	SCHEIBE	RONDELLE	ARANDELA	RONDELLA
7	SL04385	SCREW	2	SCHRAUBE	VIS	TORNILLO	VITE
8	SL06009	WASHER	17	SCHEIBE	RONDELLE	ARANDELA	ROSETTA
9	SL05009	NUT	17	MUTTER	ECROU	TUERCA	DADO
10	GR23479-3	WIRING UNIT	1	VERKABELUNG	GROUPE CABLAGE	GRUPO CABLEO	CABLAGGIO PRINCIPALE
11	SL23571	GEARCASE / BOARD	1	ZENTRALE / KARTE	FICHE DE CONTROLE	CENTRALITA / TARJETA	SCHEDA AUSILIARIA
12	SL53018	GEARCASE / BOARD (OPTIONAL)	1	ZENTRALE / KARTE (ZUBEHÖR)	FICHE DE CONTROLE (OPTION)	CENTRALITA / TARJETA (OPCIONAL)	SCHEDA ARRESTO SPAZZOLE (OPTIONA
13	SL14184	SPACER	17	DISTANZSTÜCK	ENTRETOISE	ESPESOR	DISTANZIALE
14a	SL23693-2	LID	2	DECKEL	COUVERCLE	TAPA	COPERCHIO
14b	SL23694	FUSE CARRIER	2	SICHERUNGSSOCKEL	PORTE-FUSIBLES	PORTAFUSIBLES	PORTAFUSIBILI
15	SL23144	FUSE	7	SICHERUNGS	FUSIBLES	FUSIBLES	FUSIBILE 5A
16	SL23147	FUSE	1	SICHERUNGS	FUSIBLES	FUSIBLES	FUSIBILE 25A
17	SL23145	FUSE	1	SICHERUNGS	FUSIBLES	FUSIBLES	FUSIBILE 15A
18	SL23039	GEARCASE / BOARD	1	ZENTRALE / KARTE	FICHE DE CONTROLE	CENTRALITA / TARJETA	SCHEDA LAMPADA SPIA SCARICA BATTE
19	SL23361	GEARCASE / BOARD	1	ZENTRALE / KARTE	FICHE DE CONTROLE	CENTRALITA / TARJETA	SCHEDA PRESENZA OPERATORE
20	SL53028	GEARCASE / BOARD	1	ZENTRALE / KARTE	FICHE DE CONTROLE	CENTRALITA / TARJETA	SCHEDA DIODI
21	SL23144	FUSE	1	SICHERUNGS	FUSIBLES	FUSIBLES	FUSIBILE 5A
22	SL53040	FUSE	1	SICHERUNGS	FUSIBLES	FUSIBLES	FUSIBILE 2A

CODE:					pl1053 aa SN from 96D673
DESCRIPTION:	HAND BRAKE	BREMSE	FREIN	FRENO	FRENO A'MANO

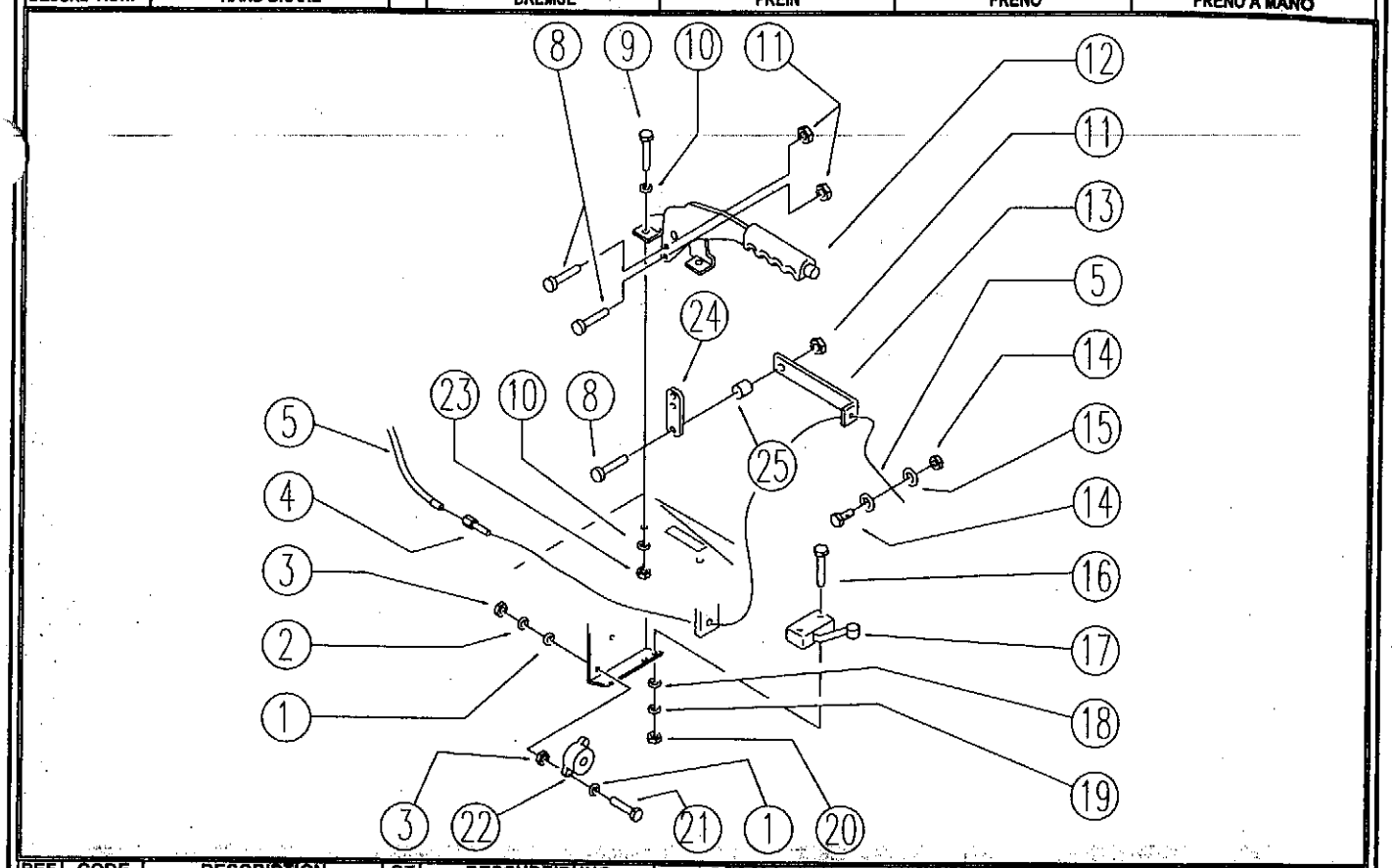

REF	CODE	DESCRIPTION	QT	BESCHREIBUNG	DESCRIPTION	DESCRIPCION	DESCRIZIONE
1	SL06009	WASHER	4	UNTERLEGSCHEIBE	RONDELLE	ARANDELA	RONDELLA
2	SL06024	WASHER	2	UNTERLEGSCHEIBE	RONDELLE	ARANDELA	RONDELLA
3	SL05009	NUT	4	MUTTER	ECROU	TUERCA	DADO
4	SL14222	REGISTER	1	REGLER	REGISTRE	REGISTRO	REGISTRO
5	SL14210	CABLE	1	KABEL	CABLE	CABLE	CAVO
8	SL04023	SCREW	3	SCHRAUBE	VIS	TORNILLO	VITE
9	SL04048	SCREW	2	SCHRAUBE	VIS	TORNILLO	VITE
10	SL06004	WASHER	4	UNTERLEGSCHEIBE	RONDELLE	ARANDELA	RONDELLA
11	SL05001	NUT	3	MUTTER	ECROU	TUERCA	DADO
12	SL20042	LEVER	1	HEBEL	LEVIER	PALANCA	LEVA
13	SL09731	SMALL BRACKET	1	KLEINER BÜGEL	PETIT ETRIER	ABRAZADERA	STAFFETTA
14	SL14212	CLAMP	1	KLEMME	BORNE	BORNE / SUJETADOR	MORSETTO
15	SL06011	WASHER	2	UNTERLEGSCHEIBE	RONDELLE	ARANDELA	RONDELLA
16	SL04197	SCREW	2	SCHRAUBE	VIS	TORNILLO	VITE
17	SL23200	MICROSWITCH	1	MIKROSCHALTER	MICRO-INTERRUPTEUR	MICROINTERRUPTOR	MICROINTERRUTTORE
18	SL06019	WASHER	2	UNTERLEGSCHEIBE	RONDELLE	ARANDELA	RONDELLA
19	SL06033	WASHER	2	UNTERLEGSCHEIBE	RONDELLE	ARANDELA	RONDELLA
20	SL05012	NUT	2	MUTTER	ECROU	TUERCA	DADO
21	SL04016	SCREW	2	SCHRAUBE	VIS	TORNILLO	VITE
22	SL23354	INDICATOR	1	WARNVORRICHTUNG	AVERTISSEUR	AVISADOR	AVVISTATORE
23	SL05011	NUT	2	MUTTER	ECROU	TUERCA	DADO
24	SL09722	BLOCK / LOCK	1	SPERRE	BLOCAGE / VERROUILLAGE	BLOQUE / BLOQUEO	BLOCCO
25	SL07062	SCREW	1	SCHRAUBE	VIS	TORNILLO	BOCCOLA

CODE:					pl1066 ab SN from 00E000
DESCRIPTION:	SQUEEGEE PEDAL	PEDAL	PEDALE SQUEEGEE	PEDAL SQUEEGEE	PEDALE SQUEEGEE

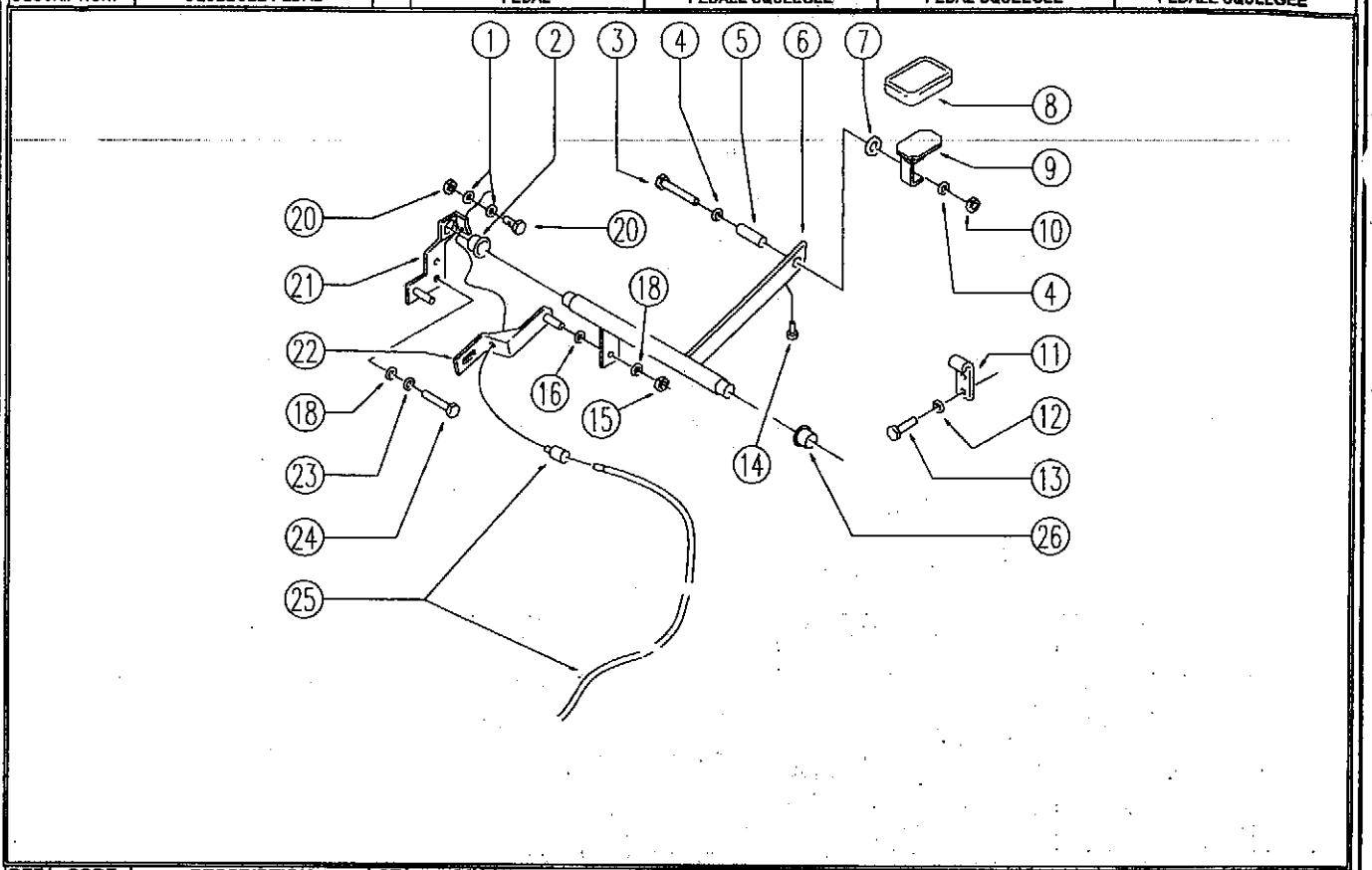

REF.	CODE	DESCRIPTION	QT	BESCHREIBUNG	DESCRIPTION	DESCRIPCION	DESCRIZIONE
1	SL06011	WASHER	2	SCHEIBE	RONDELLE	ARANDELA	RONDELLA
2	SL12037	BEARING	1	LAGER	PALIER	COJINETE	CUSCINETTO
3	SL04073	SCREW	1	SCHRAUBE	VIS	TORNILLO	VITE
4	SL06004	WASHER	2	SCHEIBE	RONDELLE	ARANDELA	RONDELLA
5	SL07311	SPACER	1	DISTANZSTÜCK	ENTRETOISE	ESPESOR	DISTANZIALE
6	SL09738	LEVER	1	HEBEL	LEVIER	PALANCA	LEVA
7	SL06068	WASHER	1	SCHEIBE	RONDELLE	ARANDELA	RONDELLA
8	SL20013	RUBBER	1	GUMMILAGER	BOUCHON CAOUTCHOUC	TAPON GOMA	GOMMA
9	SL09741	TREADLE	1	PEDAL	PEDALE	PEDAL	PEDALE
10	SL05041	NUT	1	MUTTER	ECROU	TUERCA	DADO
11	SL09740	BLOCK	1	SPERRE	BLOCAGE	BLOQUE	FERMO
12	SL06016	WASHER	2	SCHEIBE	RONDELLE	ARANDELA	RONDELLA
13	SL04223	SCREW	2	SCHRAUBE	VIS	TORNILLO	VITE
14	SL14309	RUBBER	1	GUMMILAGER	BOUCHON CAOUTCHOUC	TAPON GOMA	TAPPO-GOMMINO
15	SL05039	NUT	1	MUTTER	ECROU	TUERCA	DADO
16	SL06064	WASHER	1	SCHEIBE	RONDELLE	ARANDELA	ROSETTA
18	SL06003	WASHER	3	SCHEIBE	RONDELLE	ARANDELA	RONDELLA
20	SL14212	CLAMP	1	KLEMME	BORNE	BORNE / SUJETADOR	MORSETTO
21	SL09739	PLATE	1	PLATTE	PLAQUE	PLACA	PIASTRINA
22	SL09766	PLATE	1	PLATTE	PLAQUE	PLACA	PIASTRA
23	SL06002	WASHER	2	SCHEIBE	RONDELLE	ARANDELA	RONDELLA
24	SL04004	SCREW	2	SCHRAUBE	VIS	TORNILLO	VITE
25	SL14224	CABLE	1	KABEL	CABLE	CABLE	CAVO
26	SL12035	BEARING	1	LAGER	PALIER	COJINETE	CUSCINETTO

CODE: pl1237 aa SN from 98A100

DESCRIPTION:	BRUSHES #450	BURSTEN #450	BROSSES #450	CEPILLOS #450	SPAZZOLE #450

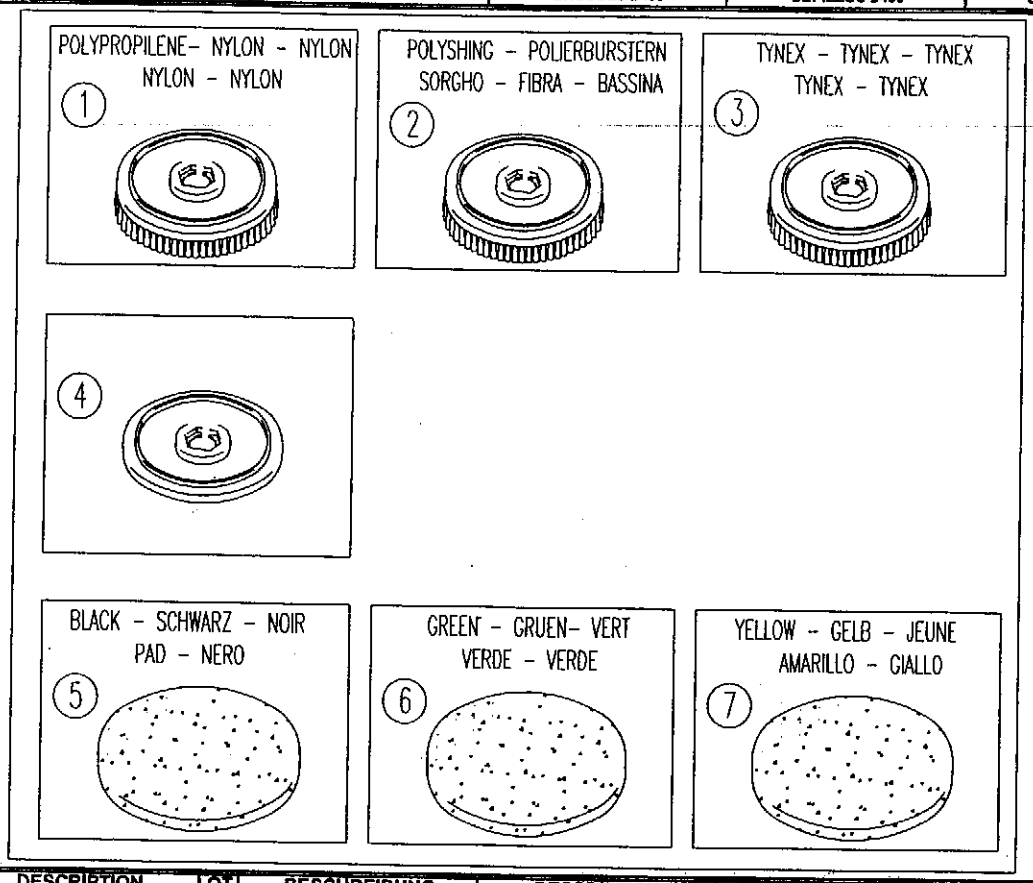

REF	CODE	DESCRIPTION	QT	BESCHREIBUNG	DESCRIPTION	DESCRIPCION	DESCRIZIONE
1	AL04705	POLYPROPYLENE BRUSH		NYLON BURSTEN	BROSSES NYLON	CEPILLOS NYLON	SPAZZOLA NYLON
2	AL04707	POLYSHING BRUSH		POLIERBURSTERN	BROSSES SORGHO	CEPILLOS FIBRA	SPAZZOLA BASSINA
3	AL04706	TYNEX BRUSHES		TYNEX BURSTERN	BROSSES TYNEX	CEPILLOS TYNEX	SPAZZOLA TYNEX
4	AL04701	PAD DRIVER		TREIBTELLERS	PLATEAUX PORTE DISQUE	PLATOS DE ARRASTER	DISCO TRASCINATORE
5	AL02219	STRIPPING PAD(BLACK)		SCHLEIFSCHEIBEN(SCHWARZ)	DISQUES ABRASIFS(NOIR)	DISCO ABRASIVOS(PAD)	DISCO ABRASIVO(NERO)
6	AL02220	STRIPPING PAD(GREEN)		SCHLEIFSCHEIBEN(GRUEN)	DISQUES ABRASIFS(VERT)	DISCO ABRASIVOS(VERDE)	DISCO ABRASIVO(VERDE)
7	AL02221	STRIPPING PAD(YELLOW)		SCHLEIFSCHEIBEN(GELB)	DISQUES ABRASIFS(JEUNE)	DISCO ABRASIVOS(AMARILLO)	DISCO ABRASIVO(GIALLO)

CODE:					pl1277 ae SN from 00E200
DESCRIPTION:	EXTERNAL PARTS	EXTERNE TEILE	EXTERNES PARTIES	EXTERNAS PARTES	PARTI ESTERNE

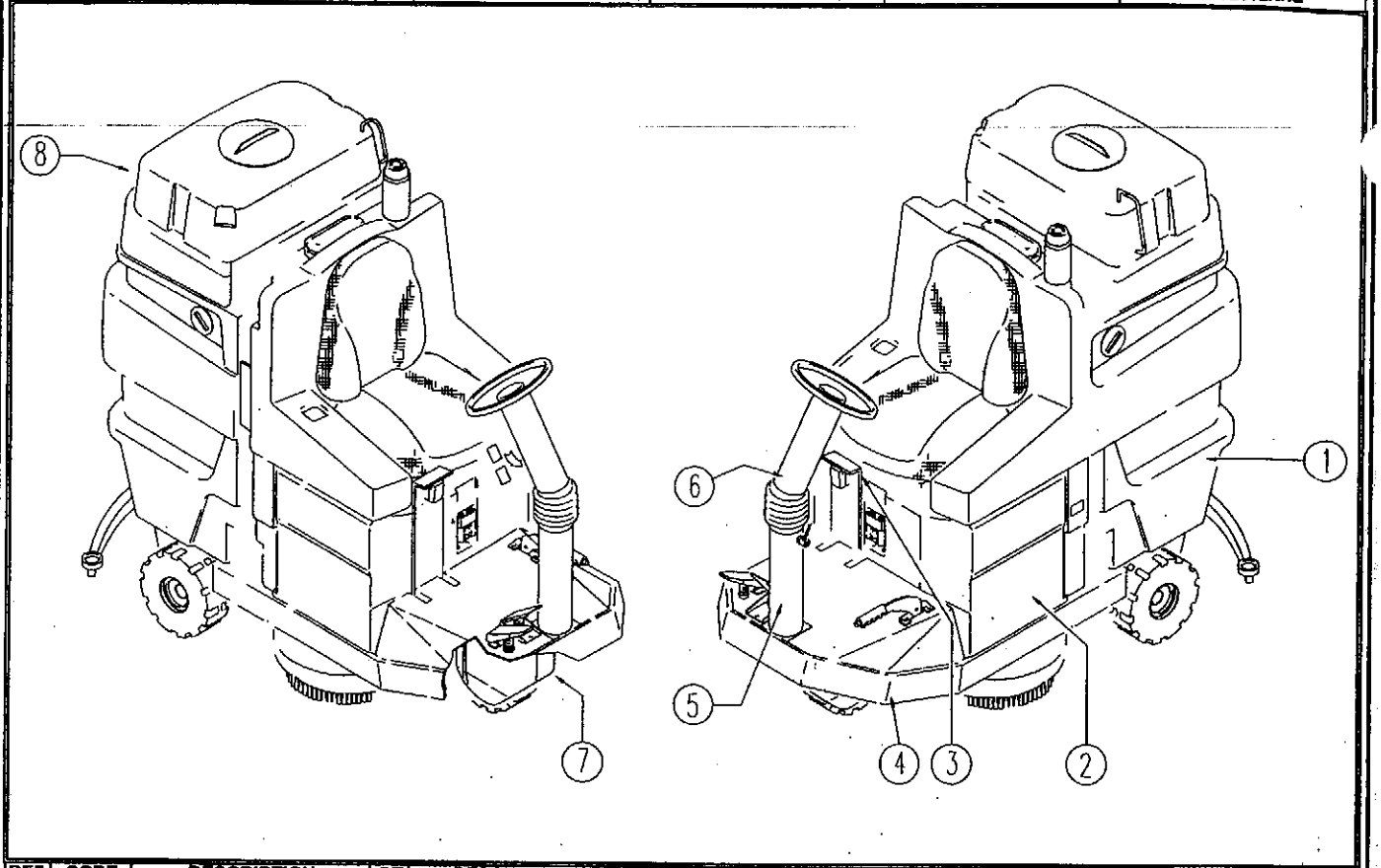

REF	CODE	DESCRIPTION	QT	BESCHREIBUNG	DESCRIPTION	DESCRIPCION	DESCRIZIONE
1	SL17531VE	GREEN TANK	1	GRÜNER TANK	RESERVOIR VERT	TANQUE VERDE	SERBATOIO VERDE
1	SL17531AS	GREY TANK	1	GRAUER TANK	RESERVOIR GRIS	TANQUE GRIS	SERBATOIO GRIGIO
1	SL17531RO	RED TANK	1	ROTER TANK	RESERVOIR ROUGE	TANQUE ROJO	SERBATOIO ROSSO
2	SL17342NE	BLACK BOX	1	SCHWARZER BEHÄLTER	CAISSON NOIR	CAJA NEGRO	CASSONE NERO
2	SL17342BC	RED BOX	1	ROTER BEHÄLTER	CAISSON ROUGE	CAJA ROJO	CASSONE ROSSO
3	SL09614F	HANDLE	1	HANDGRIFF	POIGNEE	PERILLA / ASA	MANIGLIA
4	SL39006	FRAME	1	RAHMEN	CADRE	CHASIS	TELAIO
5	SL09698F	STEERING COLUMN	1	LENKSÄULE	BARRE / TUBE	COLUMNA DE DIRECCIÓN	PIANTONE SUPERIORE
6	SL09697F	STEERING COLUMN	1	LENKSÄULE	BARRE / TUBE	COLUMNA DE DIRECCIÓN	PIANTONE INFERIORE
7	SL17337NE	CASE	1	SCHWARZES SCHUTZGEHÄUSE	CARTER NOIR	CÁRTER NEGRO	CARTER NERO
7	SL17337BC	RED CASE	1	ROTES SCHUTZGEHÄUSE	CARTER ROUGE	CÁRTER ROJO	CARTER ROSSO
8	SL17518NE-2	BLACK TANK	1	SCHWARZER TANK	RESERVOIR NOIR	TANQUE NEGRO	SERBATOIO NERO